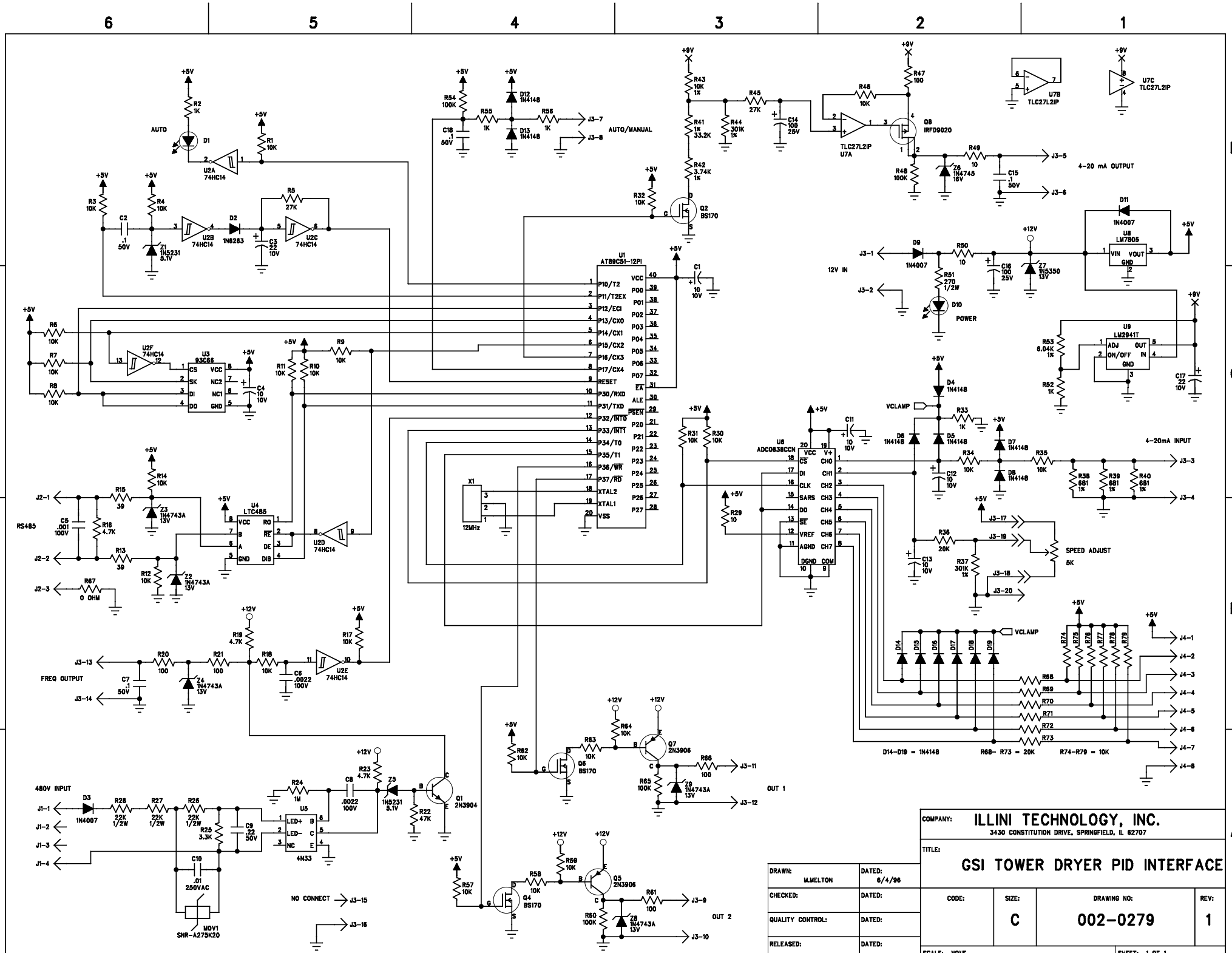

COMPANY: ILLINI TECHNOLOGY, INC. 3430 CONSTITUTION DRIVE, SPRINGFIELD, IL 62707					
TITLE: GSI TOWER DRYER PID INTERFACE					
DRAWN: M.MELTON	DATED: 6/4/96	CODE:	SIZE: C	DRAWING NO: 002-0279	REV: 1
CHECKED:	DATED:				
QUALITY CONTROL:	DATED:				
RELEASED:	DATED:	SCALE: NONE		SHEET: 1 OF 1	