AIRSTREAM

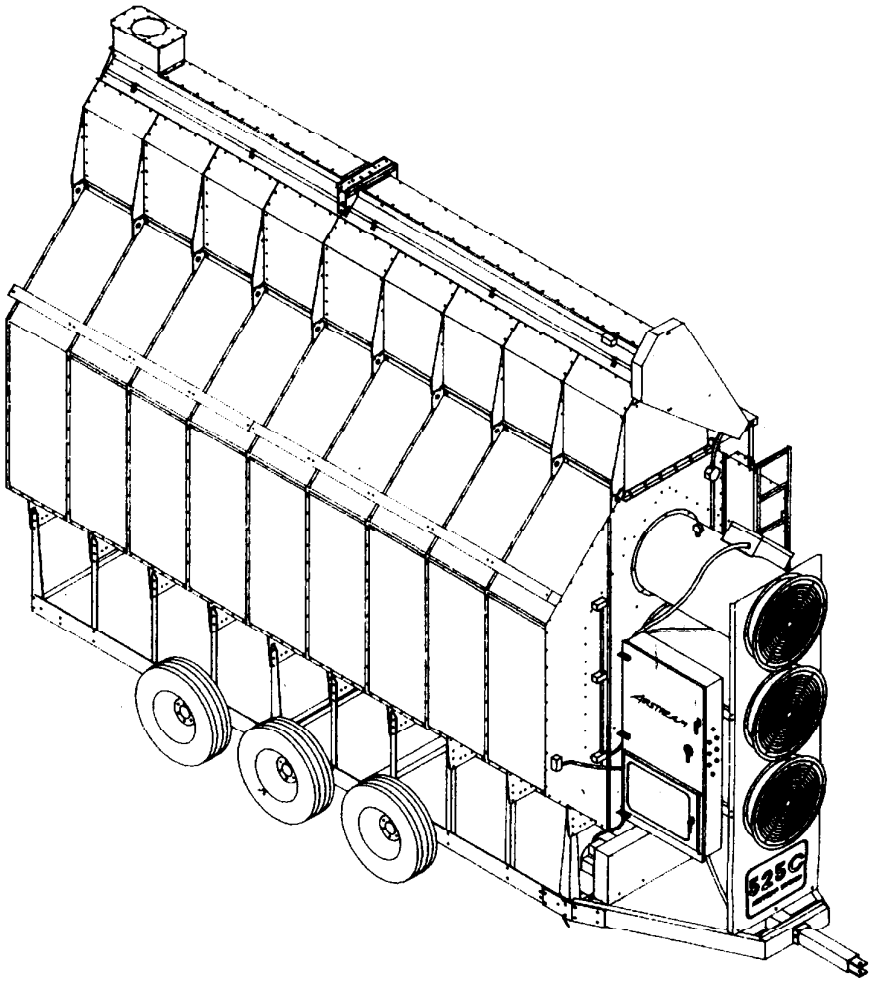

PARTS LIST

AIRSTREAM C-SERIES MULTI-FAN GRAIN DRYERS

CONTENTS:

	page
MAIN ASSEMBLY	1
LOCATION OF CAPILARY SENSORS	5
TOP AUGER ASSEMBLY	7
SCR DRIVE	11
BOTTOM AUGER CLEAN-OUT	14
BOTTOM AUGER & METER ROLL DETAIL	15
CONTROL BOX ASSEMBLY	17
CONTROL BOX, FRONT PANEL	19
CONTROL BOX, 1 PHASE BACK PANEL	21
CONTROL BOX, 3 PHASE BACK PANEL	23
24" & 28" FAN HEATER	25
24" & 28" FAN HEATER CONTROL BOX	27
24" LP FAN HEATER PIPETRAIN	28
28" LP FAN HEATER PIPETRAIN	29
NATURAL GAS FAN HEATER PIPETRAIN	30
LP FUEL SUPPLY	31
NATURAL GAS FUEL SUPPLY	33

PNEG-170

3/1/1991

GSI

GRAIN SYSTEMS, INCORPORATED

ASSUMPTION, IL 62510 217/226-4421

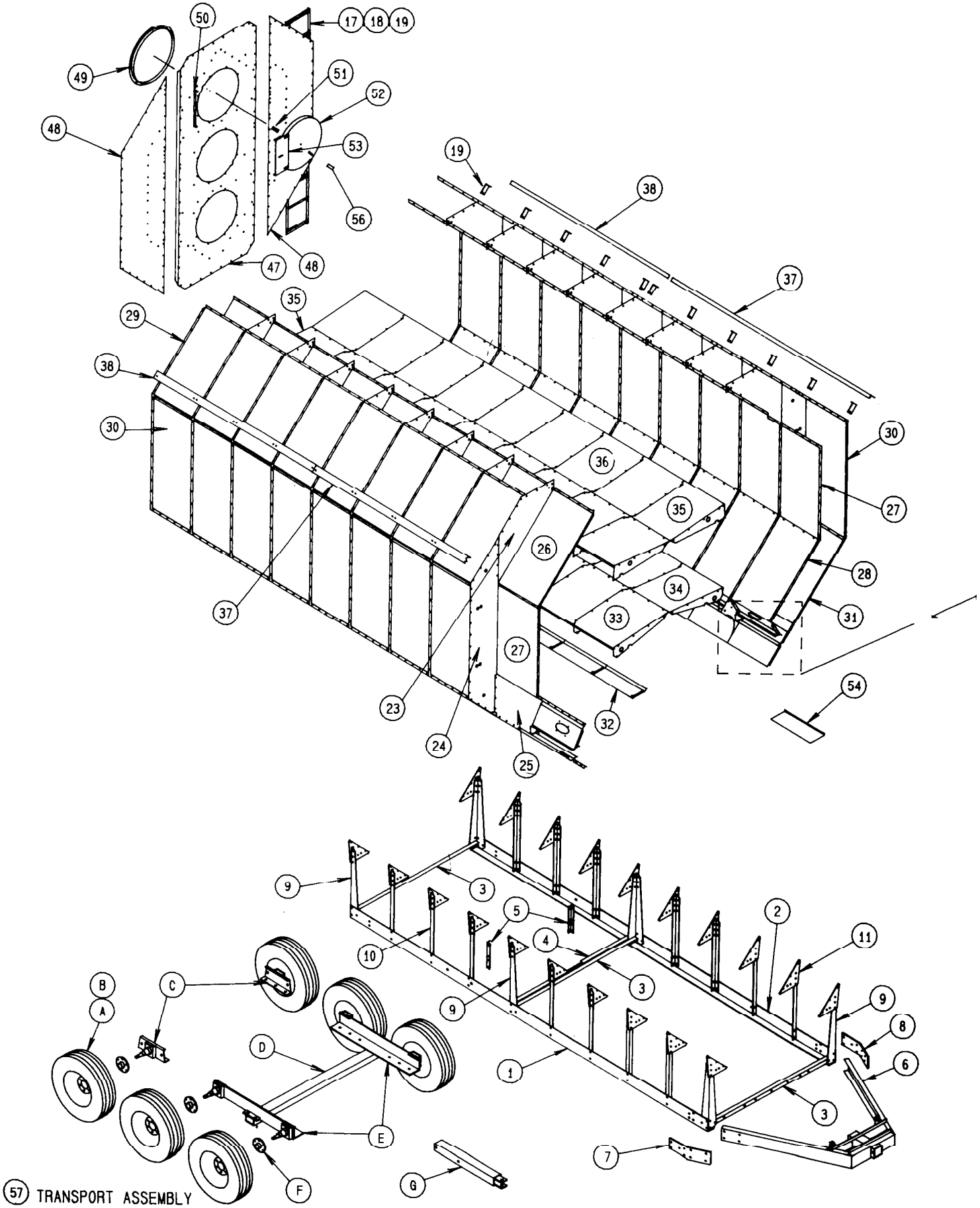
50
17
18
19
49
51
52
48
53
56
47
48
19
38
37
35
29
38
30
36
35
30
27
26
28
34
33
31
37
27
23
24
25
32
54
9
3
5
2
11
10
4
3
9
9
8
6
B
A
C
D
1
3
E
7
F
G
57 TRANSPORT ASSEMBLY

C-SERIES MULTI-FAN MODEL DRYER

MAIN ASSEMBLY

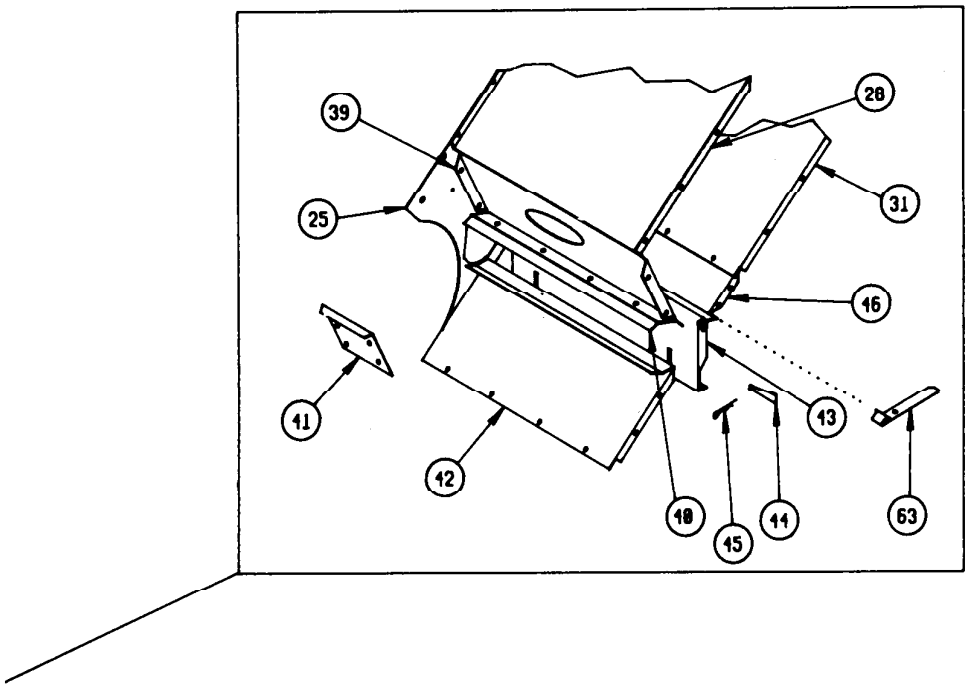

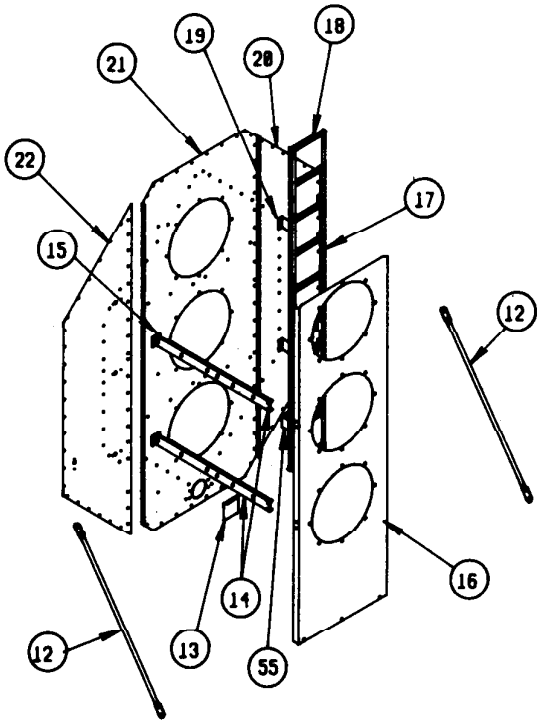

C-SERIES MULTI-FAN MODEL DRYER

MAIN ASSEMBLY

REFERENCE NUMBER	PART NUMBER	DESCRIPTION	QTY 410C	425C	510C	525C
1	D31-0044	SIDE RAIL ANGLE, R.H.			1	1
	D21-0011	SIDE RAIL ANGLE, R.H.	1	1		
2	D31-0043	SIDE RAIL ANGLE, L.H.			1	1
	D21-0010	SIDE RAIL ANGLE, L.H.	1	1		
3	D01-0008	FRONT & REAR FRAME TIE	3	3	3	3
4	D31-0118	SECONDARY CROSS TIE ANGLE	1	1	1	1
5	D01-0015	STIFFENER ANGLE	2	2	2	2
6	D01-0029	HITCH WELDMENT	1	1	1	1
7	D01-0012	HITCH BRACKET, R.H.	1	1	1	1
8	D01-0011	HITCH BRACKET, L.H.	1	1	1	1
9	D01-0007	CORNER LEG	6	6	6	6
10	D01-0005	SIDE LEG	10	10	14	14
11	D01-0004	GUSSET PLATE	16	16	20	20
12	D31-0082	FRONT ANGLE SUPPORT WELDMENT	2	2	2	2
13	D01-0076	ACCESS DOOR	1	1	1	1
14	D01-0100	SUPPORT, CONTROL PANEL	2	2	2	2
15	D01-0090	MOUNTING BRACKET CONTROL PANEL	2	2	2	2
16	D31-0050	FAN HEATER FRONT SUPPORT, 525C		1		1
	D81-0002	FAN HEATER FRONT SUPPORT, 510C			1	
	D21-0028	FAN HEATER FRONT SUPPORT, 410C	1			
17	D31-0020	LADDER RAIL	4	4	4	4
18	D01-0112	LADDER RUNG	20	20	20	20
19	D01-0113	LADDER BRACKET	26	26	32	32
20	D31-0053	FRONT COLUMN END PANEL L.H.	1	1	1	1
21	D31-0051	FRONT END PANEL		1		1
	D81-0001	FRONT END PANEL			1	
	D21-0026	FRONT END PANEL	1			
22	D31-0054	FRONT COLUMN END PANEL R.H.	1	1	1	1
23	D01-0101	GARNER BULKHEAD	12	12	16	16
24	D31-0055	COLUMN BULKHEAD	12	12	16	16
25	D01-0109	HOPPER BULKHEAD	12	12	16	16
26	D01-0126	PLENUM TOP SHEET	14	14	18	18
27	D31-0012	PLENUM WALL	14	14	18	18
28	D01-0124	PLENUM BOTTOM SHEET	14	14	18	18
29	D01-0127	ROOF SHEET, GALVANIZED (STAND.)	14	14	18	18
	D01-0265	ROOF SHEET, STAINLESS (OPT)				
30	D31-0013	OUTSIDE WALL SHEET, GALVANIZED	14	14	18	18
	D31-0040	OUTSIDE WALL SHEET, STAINLESS (OPT)				
31	D01-0128	HOPPER SHEET, GALVANIZED (STAND)	14	14	18	18
	D01-0267	HOPPER SHEET, STAINLESS (OPT)				
32	D01-0162	PLENUM BOTTOM CLOSURE PANEL, HINGED	7	7	9	9
33	D31-0032	BOTTOM PLENUM DIVIDER	12	12	16	16
34	D31-0033	BOTTOM PLENUM DIVIDER - END	2	2	2	2
35	D31-0034	TOP PLENUM DIVIDER END		2		2
36	D31-0035	TOP PLENUM DIVIDER		12		16
37	D01-0164	WET BIN TRANSPORT ANGLE, 120"			2	2
	D21-0004	WET BIN TRANSPORT ANGLE, 72"	2	2		

MAIN ASSEMBLY (Cont.)

REFERENCE NUMBER	PART NUMBER	DESCRIPTION	QTY 410C	425C	510C	525C
38	D31-0014	WET BIN TRANSPORT ANGLE, 96"	2	2	2	2
39	D01-0052	METER ROLL UPPER SHIELD	14	14	18	18
40	D01-0046	METER ROLL ADJUSTMENT DAMPER	14	14	18	18
41	D01-0042	COLUMN CLEAN COVER	14	14	18	18
42	D01-0048	TROUGH PANEL WELDMENT	14	14	18	18
43	D01-0045	ACCESS DOOR	14	14	18	18
44	D01-0039	DOOR LATCH	28	28	36	36
45	S-6552	HAIR PIN, COTTER #14	28	28	36	36
46	D01-0050	CONNECTOR SHEET	14	14	18	18
47	D31-0052	REAR END PANEL	1	1		1
	D61-0102	REAR END PANEL 510C			1	
48	D31-0047	COLUMN END PANEL,REAR	2	2	2	2
49	D01-0129	REAR PANEL ANGLE RING	3	3	3	3
50	D01-0057	HINGE, REAR DOOR	3	3	3	3
51	D01-0053	REAR DOOR HANDLE LATCH	3	3	3	3
52	D01-0054	REAR ACCESS DOOR	3	3	3	3
53	D01-0051	MOUNTING BRACKET REAR DOOR HINGE	3	3	3	3
54	D01-0117	SERVICE TOOL	2	2	2	2
55	D01-0114	LADDER LOWER BRACKET	1	1	1	1
56	D01-0056	REAR DOOR HANDLE	3	3	3	3
57	TK-03	3 AXLE TRANSPORT KIT A,B,C,D,E,F,G ARE INCLUDED IN KIT			1	1
A	D02-0033	WHEEL, 15" 6 BOLT 3400 LB RATING			6	6
B	D02-0050	TIRE, 15" 8 PLY D LOAD RATING			6	6
C	D01-0032	AXLE BRACKET WELDMENT			2	2
D	D31-0061	TRANSPORT CROSS TUBE			1	1
E	D31-0060	TRANSPORT WELDMENT			2	2
F	D01-0188	HUB			6	6
G	D01-0022	HITCH INNER TUBE WELDMENT			1	1
57	TK-02-S	2 AXLE TRANSPORT KIT A,B,D,E,F,G ARE INCLUDED IN KIT	1	1		
A	D02-0033	WHEEL, 15" 6 BOLT 3400 LB.RATING	4	4		
B	D02-0050	TIRE, 15" 8 PLY D LOAD RATING	4	4		
D	D31-0061	TRANSPORT CROSS TUBE	1	1		
E	D31-0060	TRANSPORT WELDMENT	2	2		
F	D01-0188	HUB	4	4		
G	D01-0022	HITCH INNER TUBE WELDMENT	1	1		

C-SERIES MULTI-FAN MODEL DRYER

LOCATION OF CAPILARY SENSORS

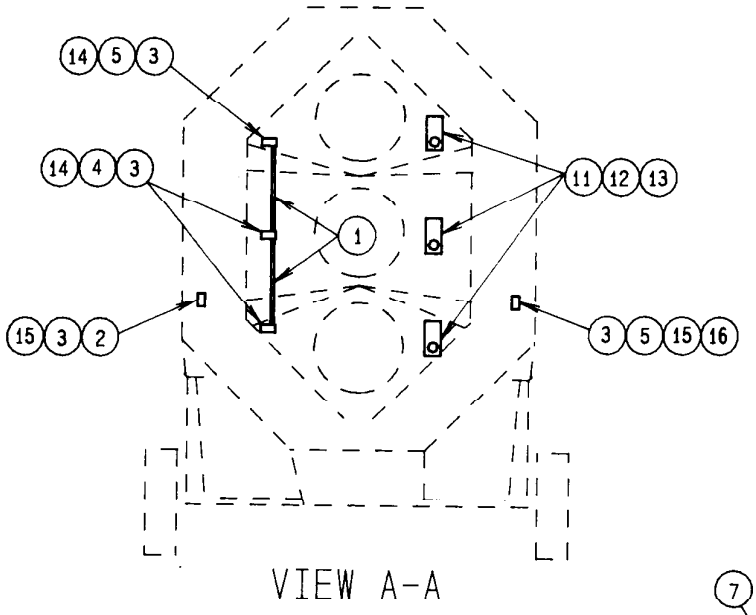

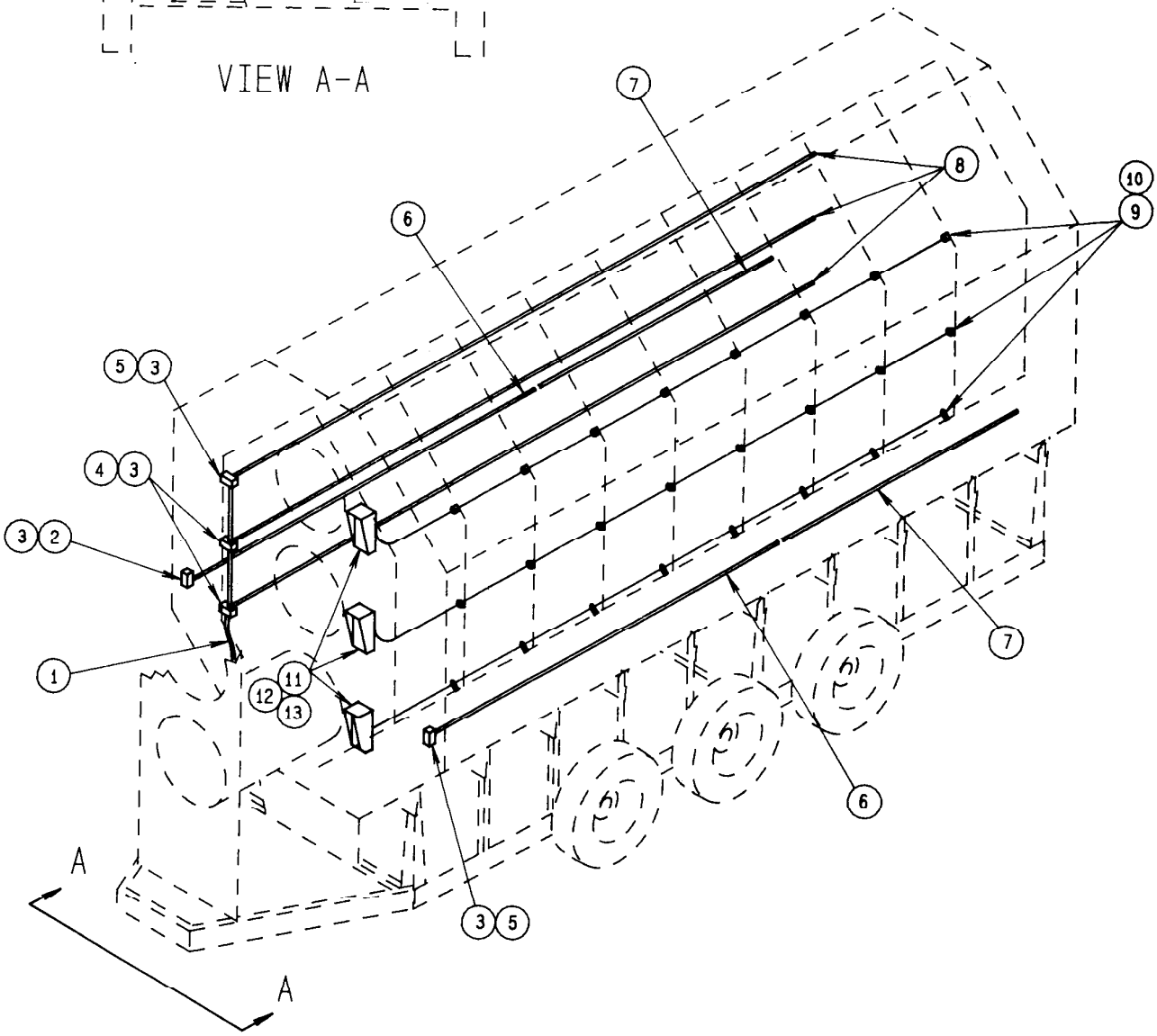

C-SERIES MULTI-FAN MODEL DRYER

LOCATION OF CAPILARY SENSORS

REFERENCE NUMBER	PART NUMBER	DESCRIPTION	QTY 410C	425C	510C	525C
1	TFH-2058	1/2" SEALTITE TYPE EF				
2	D31-0045	BOTTOM HI-LIMIT MOUNTING BOX	1	1	1	1
3	D03-0051	2 1/8" X 4" HANDY BOX COVER	4	5	4	5
4	D01-0279	CENTER PLENUM HI-LIMIT MOUNTING BOX	1	2	1	2
5	D01-0255	COLUMN HIGH LIMIT MOUNTING BOX	2	2	2	2
6	D31-0041	CONDUIT, COLUMN HI-LIMIT 120" LONG	2	2	2	2
7	D21-0009	CONDUIT, COLUMN HI-LIMIT 32" LONG	2	2		
	D31-0042	CONDUIT, COLUMN HI-LIMIT 60" LONG			2	2
8	D31-0150	1/2" SCH. 40 PIPE THREADED, 210"			2	3
	D21-0018	1/2" SCH. 40 PIPE THREADED, 162"	2	3		
9	D02-0023	INSULATED CAPILLARY HOLDER	24	36	32	48
10	D01-0123	BRACKET	12	18	16	24
11	D01-0184	THERMOSTAT SENSOR HOUSING SUB ASS.	2	3	2	3
12	D03-0047	TEMPERATURE CONTROL 110-290° F	2	3	2	3
13	D03-0062	THERMOMETER	2	3	2	3
14	D03-0004	PLENUM HI-LIMIT THERMOSTAT	2	3	2	3
15	D03-0045	RTD TEMPERATURE SENSOR (ELECTRONIC OPT.)	4	4	4	4
16	D03-0005	FIXED GRAIN HI-LIMIT THERMOSTAT	1	1	1	1

C-SERIES MULTI-FAN MODEL DRYER

TOP AUGER ASSEMBLY

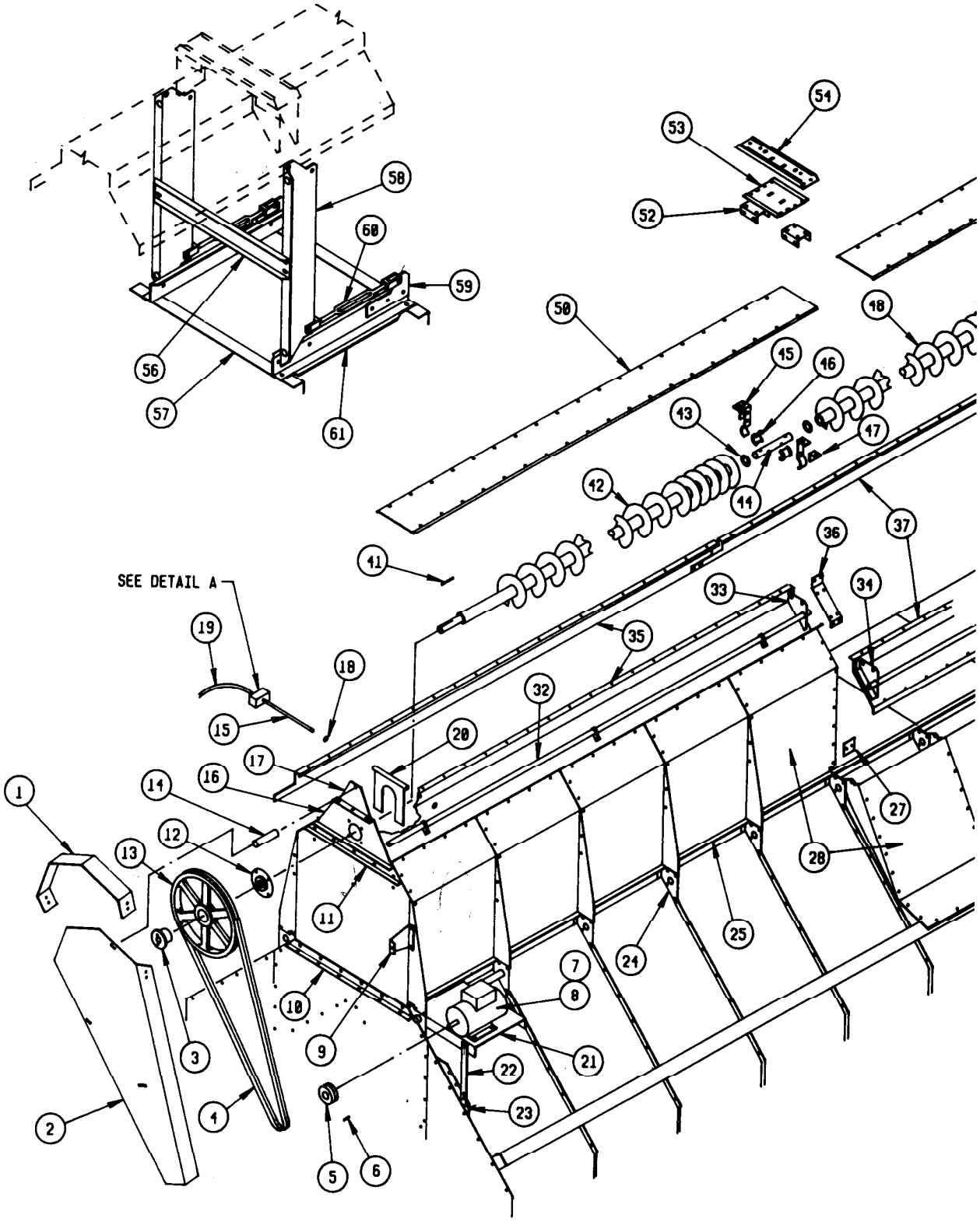

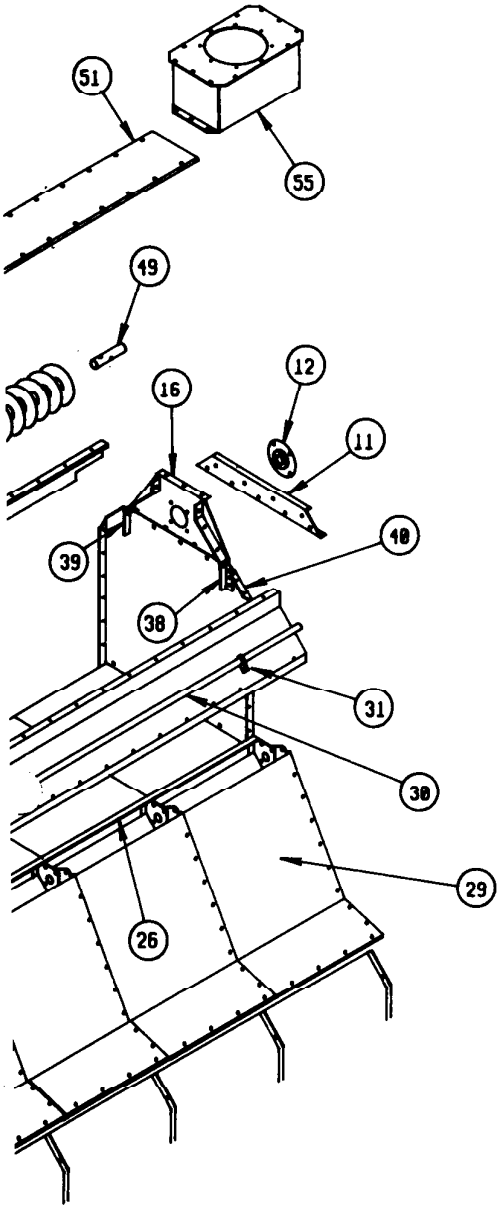
51
55
49
16
12
11
39
40
38
31
30
29
26

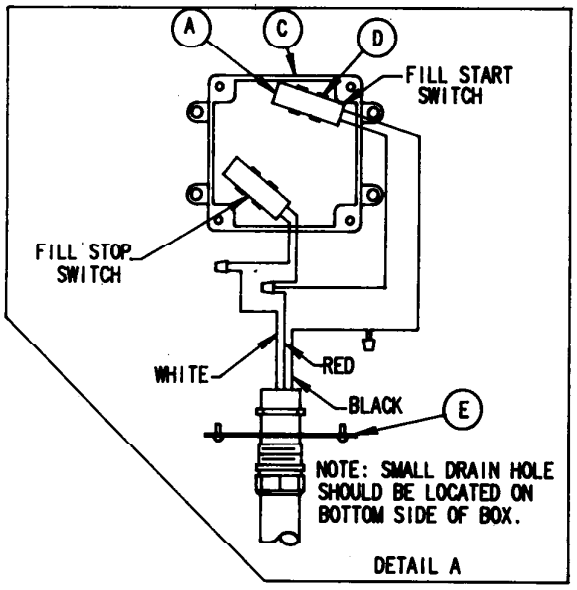
A
C
D
FILL START SWITCH
FILL STOP SWITCH
WHITE
RED
BLACK
E
NOTE: SMALL DRAIN HOLE SHOULD BE LOCATED ON BOTTOM SIDE OF BOX.
DETAIL A

C-SERIES MULTI-FAN MODEL DRYER

TOP AUGER ASSEMBLY

REFERENCE NUMBER	PART NUMBER	DESCRIPTION	QTY 410C/425C	QTY 510C/525C
1	D01-0237	TOP AUGER BELT GUARD, END	1	1
2	D01-0238	TOP AUGER BELT GUARD	1	1
3	D32-0019	TOP AUGER SHEAVE BUSHING 1 1/2	1	1
4	D02-0051	DRIVE BELT SET -(2) MATCHED BX120	1	1
5	4018-2	MOTOR SHEAVE 2BK40 1 1/8 BORE	1	1
6	D01-0098	KEY 1/4 X 1/4 X 1"	1	1
7	500-1	5 HP MOTOR 1-PH 230V 1750 RPM	1	1
8	500-3	5 HP MOTOR 3-PH 230V 1750 RPM	1	1
9	D01-0141	BELT GUARD BRACKET - TOP AUGER	1	1
10	D01-0044	TOP ANGLE BRACKET	4	4
11	D01-0156	AUGER HOUSING END TIE CHANNEL	2	2
12	D32-0001	1 1/2 FLANGELETTE BEARING	2	2
13	D02-0024	TOP AUGER SHEAVE (2TB184)	1	1
14	D01-0158	SPACER	2	2
15	D01-0103	MERCURY SWITCH SHAFT	1	1
16	D31-0028	TOP AUGER HOUSING END	2	2
17	D01-0155	BELT GUARD SPACER MOUNTING BRACKET	1	1
18	D02-0026	MERCURY SWITCH SHAFT BUSHING	2	2
19	D01-0192	MERCURY SWITCH ASSEMBLY	1	1
20	D01-0167	MERCURY SWITCH PADDLE WELDMENT	1	1
		REQUIRES 5/16"-18 NC X 1/4" SOCKET SET SCREWS		
21	D01-0173	TOP MOTOR MOUNT WELDMENT	1	1
22	D01-0169	TOP MOTOR BELT TIGHTENER	1	1
23	D01-0170	ANCHOR BRACKET - MOTOR MOUNT	1	1
24	D01-0153	TOP EDGE ANGLE GUSSET R.H.	2	2
	D01-0152	TOP EDGE ANGLE GUSSET L.H.	14	18
25	D01-0168	TOP EDGE ANGLE, 119.875"		2
	D21-0003	TOP EDGE ANGLE, 71.875"	2	
26	D31-0004	TOP EDGE ANGLE, 95.875 "	2	2
27	D31-0003	TOP EDGE ANGLE SPLICE	2	2
28	D01-0142	WET BIN SIDE SECTION	12	16
29	D01-0145	WET BIN SIDE END SECTION	2	2
30	D31-0006	HAND RAIL, 95.750"	2	2
31	D01-0140	HANGER BRACKET, SAFETY HAND RAIL	8	10
32	D01-0151	HAND RAIL, 119.75"		2
	D21-0001	HAND RAIL, 71.75"	2	
33	D31-0001	CENTER GUSSET - HAND RAIL L.H.	2	2
34	D31-0002	CENTER RUSSET - HAND RAIL R.H.	2	2
35	D01-0161	TOP AUGER TROUGH SIDE 119.875"		2
	D21-0002	TOP AUGER TROUGH SIDE,71.875"	2	
36	D31-0008	TOP AUGER TROUGH SPLICE	2	2
37	D31-0010	TOP AUGER TROUGH SIDE, 95.875"	2	2
38	D01-0148	TOP AUGER HOUSING HINGE R.H.	2	2
39	D01-0147	TOP AUGER HOUSING HINGE - L.H.	2	2
40	D01-0154	WET BIN END	2	2
41	D31-0137	3/8 X 3/8 X 2 1/2" LONG KEY	1	1
42	D31-0091	FRONT AUGER WELDMENT - TOP		1
	D21-0015	FRONT AUGER WELDMENT - TOP	1	
43	D31-0048	MACHINE WASHER, 1 1/2 X 2 1/4	2	2
44	D31-0076	AUGER SPLICE SHAFT	1	1
45	D31-0024	TOP AUGER BEARING HANGER	2	2
46	D31-0026	1 1/2" AUGER HANGER BEARING	1	1
47	D31-0022	HANGER BEARING BRACE	2	2
48	D31-0086	REAR AUGER WELDMENT- TOP & BOTTOM	1	1

TOP AUGER ASSEMBLY (Cont.)

REFERENCE NUMBER	PART NUMBER	DESCRIPTION	QTY 410C/425C	QTY 510C/525C
49	D31-0005	TOP AUGER STUB SHAFT	1	1
50	D31-0036	TOP AUGER COVER, 116.0"		1
	D21-0007	TOP AUGER COVER, 68.0"	1	
51	D31-0037	TOP AUGER COVER, 74.0"	1	1
52	D31-0009	GUSSET ATTACHMENT BRACKET	2	2
53	D31-0015	TOP AUGER CENTER BEARING SUPPORT	1	1
54	D31-0011	CENTER STABILIZER BEAM	1	1
55	D01-0193	FILL HOPPER ASSEMBLY	1	1
56	D31-0017	TIE CHANNEL/WET BIN LIFT	1	1
57	D31-0007	MOUNTING ANGLE/WET BIN	2	2
58	D31-0018	MOUNTING BASE/WET BIN LIFT	2	2
59	D31-0016	TURN BUCKLE EAR	2	2
60	D32-0003	TURN BUCKLE	2	2
61	D31-0019	TOP AUGER CENTER SUPPORT	2	2
A	D03-0010	MERCURY SWITCH	2	2
B	D01-0205	MERCURY SWITCH MOUNTING PLATE	1	1
C	D02-0044	HANDY BOX	1	1
D	SPD-2098	MERCURY SWITCH CLIP	2	2
E	D03--0050	COVER	1	1

C-SERIES MULTI-FAN MODEL DRYER

SCR DRIVE

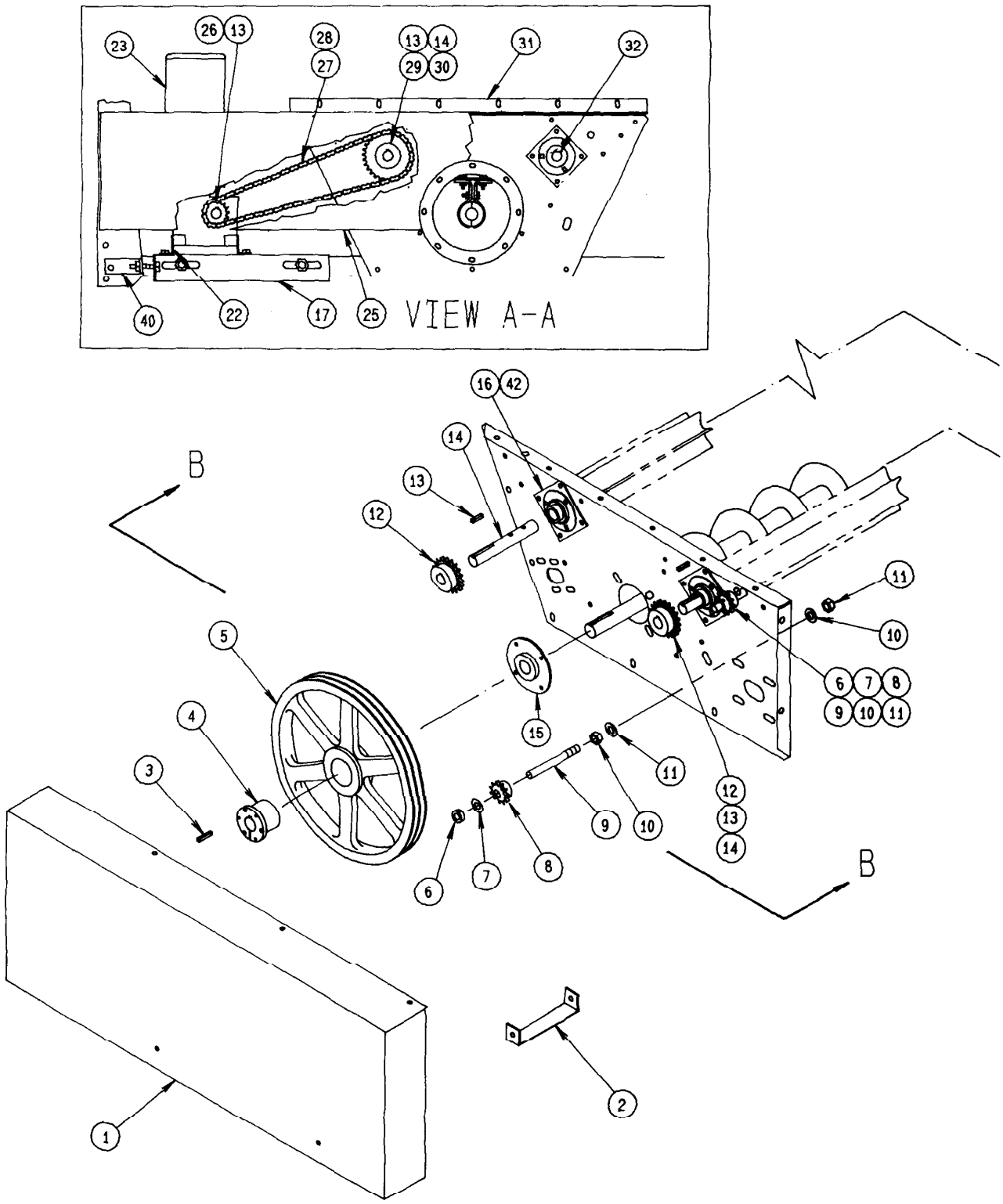

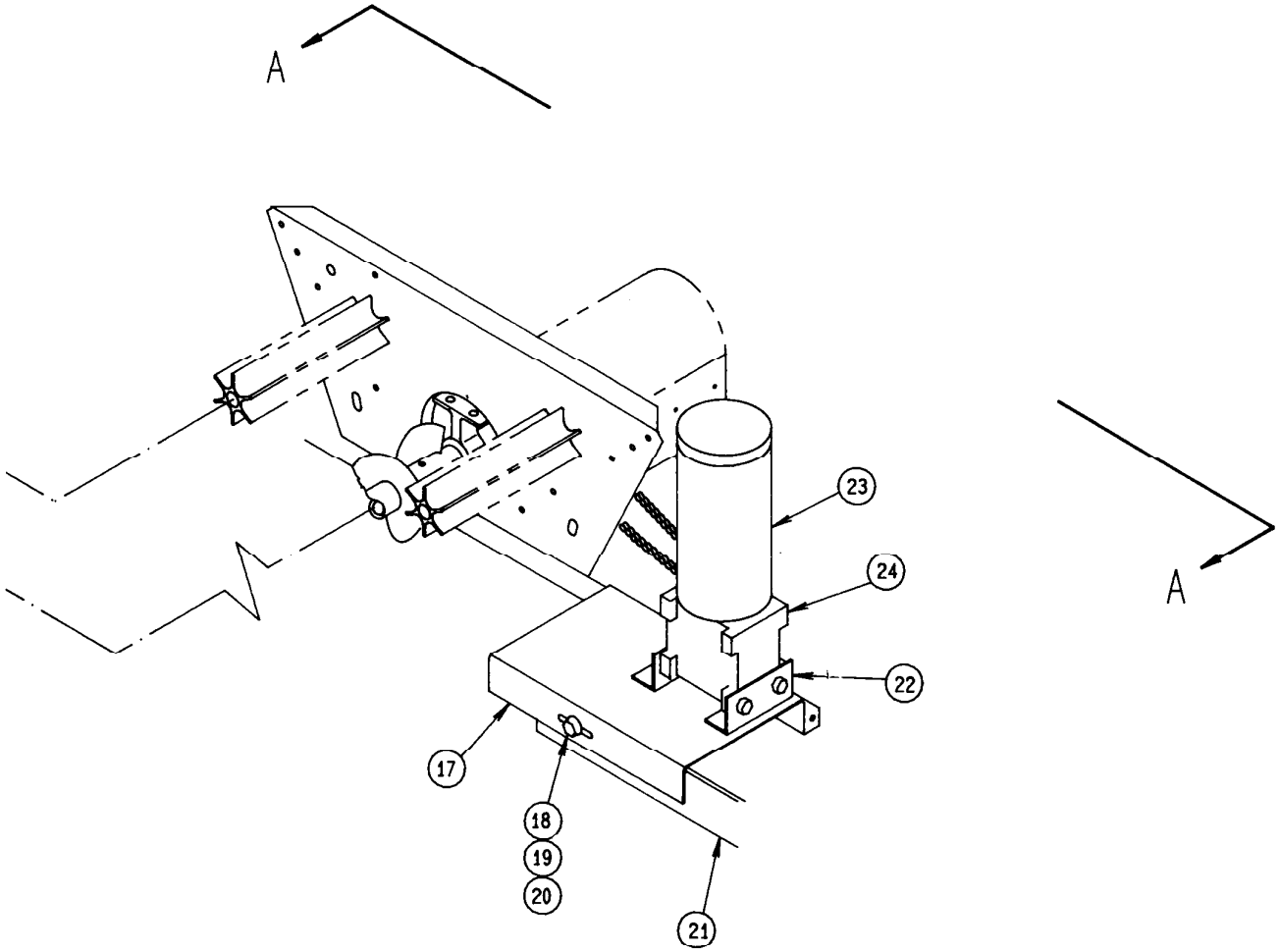
A
A
23
24
22
17
18
19
20
21

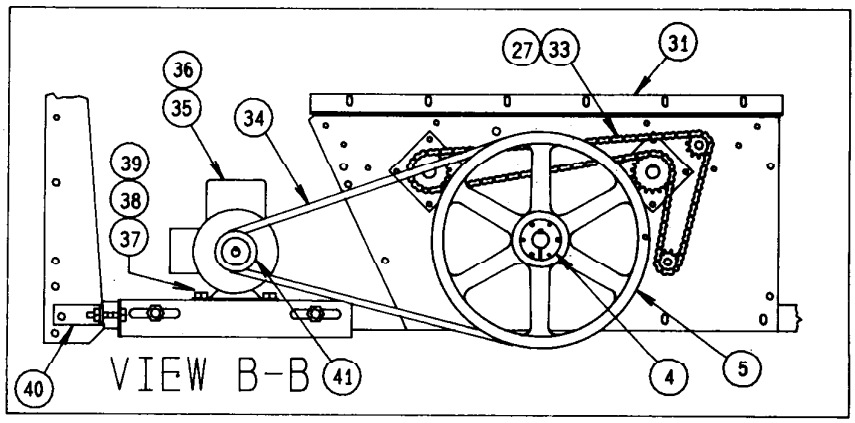
36
35
34
27
33
31
39
38
37
40
41
4
5
VIEW B-B

C-SERIES MULTI-FAN MODEL DRYER

SCR DRIVE

REFERENCE NUMBER	PART NUMBER	DESCRIPTION	QTY
1	D01-0268	*BEARING SHIELD*	1
2	D01-0065	L.H. SPACER, BEARING SHIELD	1
3	D31-0137	KEY 3/8 X 3/8 X 2 1/2" LONG	1
4	D32-0019	BUSHING Q1 x 11/2	1
5	D52-0001	SHEAVE 2TB160	1
6	S-4307	SET COLLAR 5/8"	2
7	D01-0199	MACHINE BUSHING WASHER 18GA. X 5/8"	2
8	D01-0196	SPROCKET IDLER ASSEMBLY	2
9	D01-0040	IDLER STUB SHAFT	2
10	S-4110	HEX NUT 5/8" - 11	4
11	S-858	*FLAT WASHER 5/8"*	6
12	D02-0014	SPROCKET 4019 X 1"	2
13	D01-0098	KEY 1/4 X 1/4 X 1"	4
14	D01-0006	METER ROLL DRIVESHAFT	3
15	D32-0001	FLANGETTE BEARING, 1 1/2"	1
16	D02-0002	FLANGETTE BEARING, 1"	4
17	D01-0081	MOTOR MOUNT SUPPORT	2
18	S-858	5/8" FLAT WASHER	12
19	S-6494	5/8" ESNA NUT	6
20	S-4329	5/8" X 2" HHCS	6
21	D01-0016	MOTOR MOUNT SUPPORT BRACKET	2
22	D31-0128	*VERTICAL DRIVE MOUNT ANGLES*	2
23	D32-0004	3/4 HP DC MOTO PERM. MAG. TEFC	1
24	*D32-0002*	*200 MWU 50:1 RATIO GEAR BOX*	1
25	D01-0165	METER ROLL DRIVE SHIELD	1
26	D02-0004	SPROCKET H4015-1	1
27	D02-0031	CHAIN LINK NO. 40	
28	D01-0202	CHAIN NO 40, 40" LONG	1
29	D02-0007	BUSHING H-1 1" BORE	1
30	D02-0029	SPROCKET 40H30	1
31	D01-0043	BOTTOM ANGLE BRACKET	2
32	*D01-0014*	*METER ROLL STUB SHAFT*	1
33	D01-0198	CHAIN NO. 40, 65" LONG	1
34	D32-0023	GRIPNOTCH BELT BX81	2
35	500-1	5 HP MOTOR, 1 PH, 1750 RPM	1
36	500-3	5 HP MOTOR, 3 PH, 1750 RPM	1
37	S-6076	5/16 X 3/4" HHCS PLATED	4
38	S-845	5/16 FLAT WASHER	4
39	S-6491	5/16" ESNA NUT	4
40	D01-0017	MOTOR ADJUSTMENT BRACKET	2
41	D32-0024	SHEAVE 2BK32	1
42	D01-0003	METER ROLL ADAPTAR PLATE	4

C-SERIES MULTI-FAN MODEL DRYER

BOTTOM AUGER CLEAN-OUT

REFERENCE NUMBER	PART NUMBER	DESCRIPTION	QTY 410C/425C	QTY 510C/525C
1	D01-0048	TROUGH PANEL WELDMENT	16	18
2	D31-0023	CLEAN-OUT EXTENSION, 90.75"	2	2
	D01-0181	CLEAN-OUT EXTENSION, 114.75"		2
	D21-0006	CLEAN-OUT EXTENSION, 66.75"	2	
3	D01-0177	CLEAN-OUT SUPPORT STRAP	7	10
4	D01-0175	CLEAN-OUT HINGE BRACKET	4	5
5	D01-0308	CLEAN-OUT HINGE	4	5
6	D31-0130	CLEAN-OUT DOOR SUPPORT CHANNEL	1	1
	D01-0307	CLEAN-OUT DOOR SUPPORT CHANNEL		1
	D21-0012	CLEAN-OUT DOOR SUPPORT CHANNEL	1	
7	D31-0021	CLEAN-OUT DOOR, 91"	1	1
	D01-0180	CLEAN-OUT DOOR, 115"		1
	D21-0005	CLEAN-OUT DOOR, 67"	1	
8	D01-0185	CLEAN-OUT END SEAL WELDMENT	4	4
9	D01-0261	LONG LINKAGE BAR, 37.25"	2	2
10	D01-0293	LONG LINKAGE BAR, 30.188"	2	2
11	D01-0296	SHORT LINKAGE BAR WELDMENT	4	4
12	D01-0294	CLEAN-OUT DOOR HANDLE	4	4
13	D01-0299	PIVOT ROD BRACKET	3	3
14	D01-0264	PIVOT ROD, 25.188"	2	2
15	D31-0162	PIVOT ROD, 49.625"	1	1

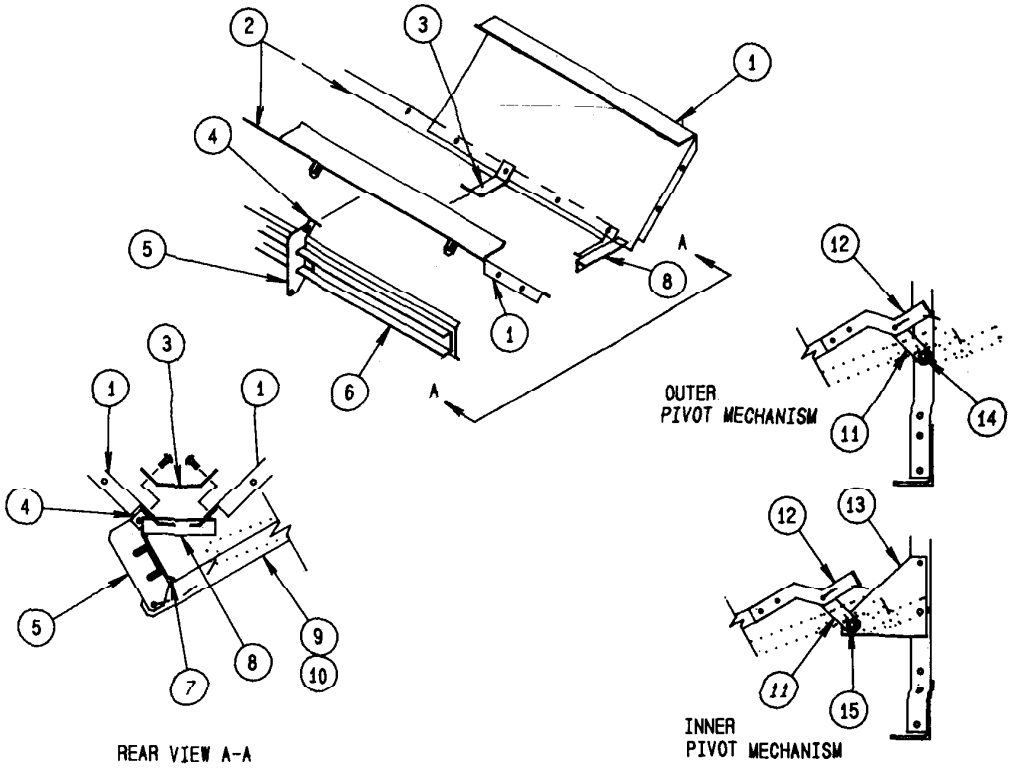

C-SERIES MULTI-FAN MODEL DRYER

BOTTOM AUGER & METER ROLL DETAIL

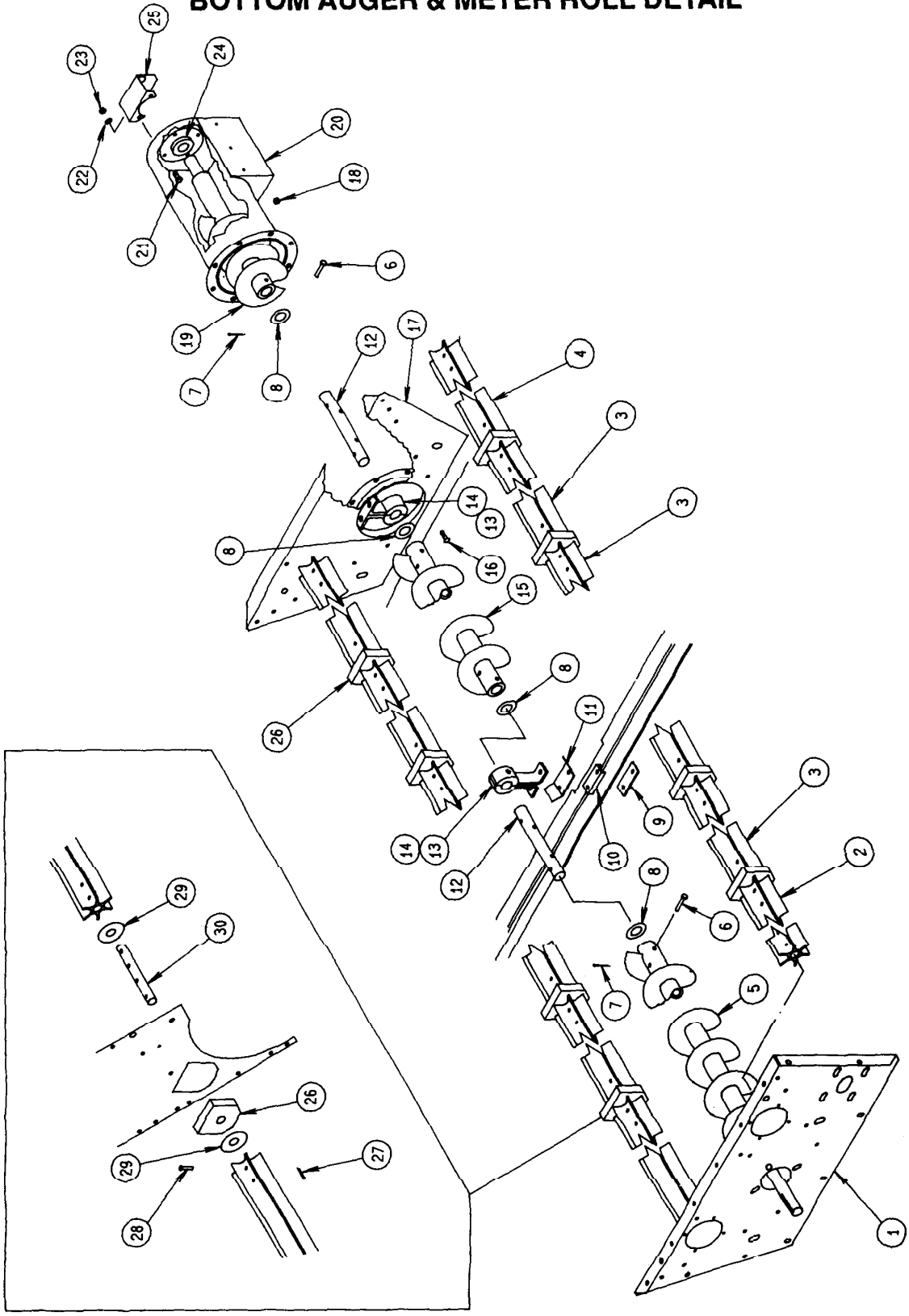

C-SERIES MULTI-FAN MODEL DRYER

BOTTOM AUGER & METER ROLL DETAIL

REFERENCE NUMBER	PART NUMBER	DESCRIPTION	QTY 410C/425C	QTY 510C/525C
1	D31-0049	BOTTOM AUGER BEARING PLATE	1	1
2	D31-0031	FRONT METERING ROLL	2	2
3	D31-0030	CENTER METER ROLL	4	6
4	D31-0029	REAR METER ROLL	2	2
5	D31-0092	FRONT AUGER WELDMENT, BOTTOM		1
	D21-0017	FRONT AUGER WELDMENT, BOTTOM	1	
6	S-6618	CLEVIS PIN 7/16 X 2 3/8	8	8
7	S-4196	COTTER PIN 5/32 X 1	8	8
8	D31-0048	MACHINE WASHER 2 1/4 X 1 1/2	4	4
9	D31-0062	TWO BOLT SPACER PLATE	1	1
10	D31-0063	SHIM-CENTER BEARING HANGER	1	1
11	D31-0064	CENTER BEARING SPACER PLATE	1	1
12	D31-0076	AUGER SPLICE SHAFT	2	2
13	D31-0025	BOTTOM AUGER BEARING HANGER	4	4
14	D31-0026	1 1/2" AUGER HANGER BEARING	2	2
15	D31-0086	REAR AUGER WELDMENT, BOTTOM	1	1
16	S-6606	5/16" X 3/4" BOLT FLANGE HEAD SERRATED	8	8
17	D31-0120	DISCHARGE PLATE MOUNTING WELDMENT	1	1
18	S-3611	5/16" WHIZ NUT	8	8
19	D31-0079	DISCHARGE AUGER WELDMENT	1	1
20	D31-0124	DISCHARGE WELDMENT	1	1
21	S-6619	CARRIAGE BOLT 1/2" X 1 1/2"	4	4
22	CH-1043	1/2" FLAT WASHER	4	4
23	S-6493	1/2" ESNA NUT	4	4
24	D32-0001	1 1/2" FLANGETTE BEARING	1	1
25	D31-0073	REAR AUGER BEARING SHIELD	1	1
26	D02-0061	METER ROLL SUPPORT BEARING	6	8
27	S-6368	1/8" X 3/4" COTTER PIN	32	40
28	D02-0028	CLEVIS PIN 5/16" X 1 3/4"	32	40
29	D31-0148	METERING ROLL WASHER	12	16
30	D31-0046	METER ROLL SPLICE SHAFT	6	8

C-SERIES MULTI-FAN MODEL DRYER

CONTROL BOX ASSEMBLY

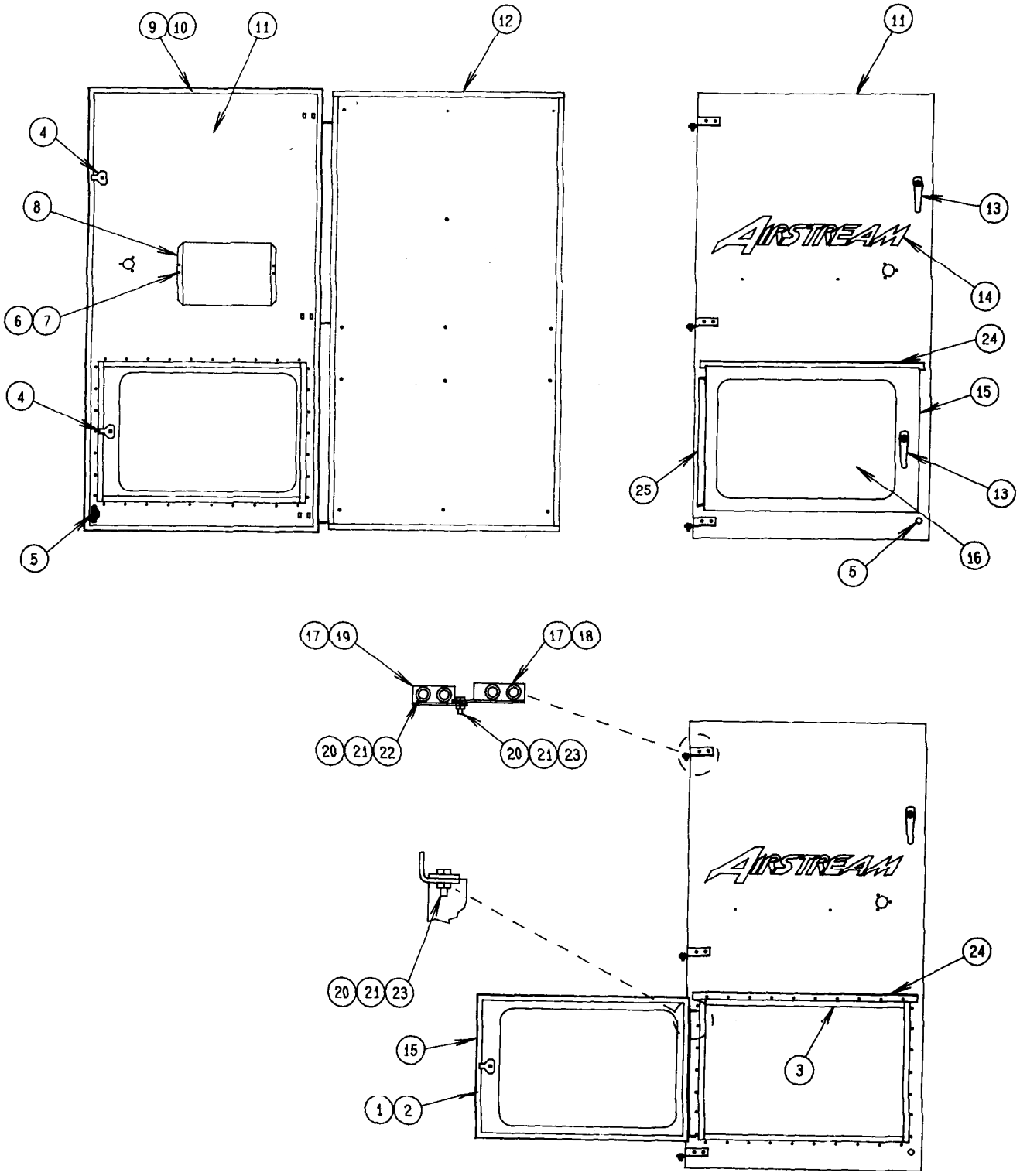

C-SERIES MULTI-FAN MODEL DRYER

CONTROL BOX ASSEMBLY

REFERENCE NUMBER	PART NUMBER	DESCRIPTION	QTY
1	D31-0134	1/4" X 3/4" WEATHERSTRIP, 20"	2
2	D31-0133	1/4" X 3/4" WEATHERSTRIP, 28"	2
3	D31-0158	OPERATORS DOOR FRAME WELDMENT	1
4	D01-0253	CONTROL BOX DOOR LATCH	2
5	TFH-2046	SOUTHCO SPRING LATCH W/ KNOB	1
6	S-6337	PAN HEAD SCREW #8-32 X 1/2"	2
7	S-6525	HEX NUT -#8 - 32	2
8	D01-0212	OWNERS MANUAL HOLDER	1
9	D31-0132	1/4" X 3/4" WEATHERSTRIP 31"	2
10	D31-0131	1/4" X 3/4" WEATHERSTRIP 62"	2
11	D31-0095	CONTROL BOX DOOR	1
12	D31-0125	CONTROL BOX WELDMENT	1
13	D02-0034	DOOR HANDLE	2
	D02-0045	GASKET, DOOR HANDLE	2
14	DC-396	AIRSTREAM DECAL	1
15	D31-0115	ACCESS OPERATORS DOOR PANEL WELDMENT	1
16	D31-0083	WINDOW - CONTROL BOX	1
17	D01-0215	BACK-UP PLATE	6
18	D01-0216	HINGE-DOOR SEGMENT	3
19	D01-0217	HINGE-BOX SEGMENT	3
20	S-6491	5/16 - 18 ESNA LOCKNUT	17
21	S-845	5/16 FLAT WASHER	17
22	S-3550	5/16 - 18 X 1" CARRIAGE BOLT	12
23	S-4275	5/16 - 18 X 3/4" HHCS	5
24	D31-0105	RAIN SHEILD ANGLE	1
25	D31-0161	HINGE BRACKET OPERATORS DOOR	1

C-SERIES MULTI-FAN MODEL DRYER

CONTROL BOX, FRONT PANEL

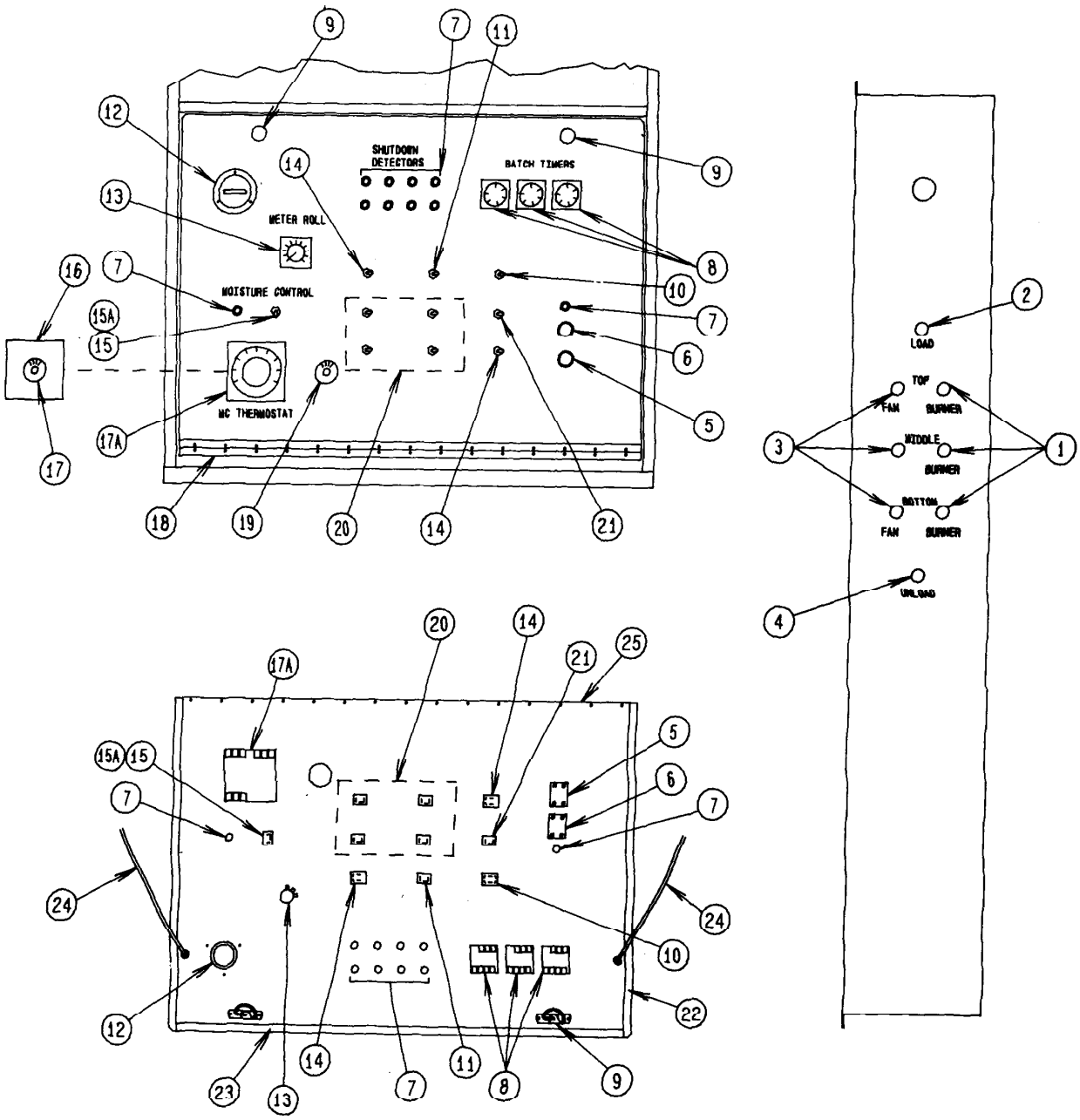

C-SERIES MULTI-FAN MODEL DRYER

CONTROL BOX, FRONT PANEL

REFERENCE NUMBER	PART NUMBER	DESCRIPTION	QTY 410C/425C	QTY 510C/525C
1	D03-0065	OPERATING LIGHT, RED LENS (OPT.)	2	3
2	D03-0066	OPERATING LIGHT, GREEN LENS (OPT.)	1	1
3	D03-0063	OPERATING LIGHT, BLUE LENS (OPT.)	2	3
4	D03-0064	OPERATING LIGHT, CLEAR LENS (OPT.)	1	1
5	D03-0020	STOP SWITCH OIL TIGHT N.C.	1	1
6	D03-0017	START SWITCH OIL TIGHT N.O	1	1
7	TFH-2021	RED LIGHT	10	10
8	D03-0003	PROCESS TIMER	3	3
9	TFH-2046	SOUTHCO SPRING LATCH W/KNOB	2	2
10	D03-0026	DPDT, ON/ON, 15A	1	1
11	D03-0024	SPDT, ON/ON, 15A	1	1
12	D02-0021	115V NON RESET HOUR METER	1	1
13	D03-0043	SCR DRIVE KNOB & DIAL KIT	1	1
14	D03-0027	DPST, OFF/ON, 15A	2	2
15	D03-0024	SPDT, ON/ON, 15A (STD. M.C.)	1	1
15A	D03-0026	DPDT, ON/ON, 15A (OPT M.C.)	1	1
16	D01-0301	ADAPTER FACE PLATE	1	1
17	D03-0083	80-220° F THERMOSTAT (STD. M.C.)	1	1
17A	D03-0041	40-260° F THERMOSTAT (OPT. M.C.)	1	1
18	D31-0116	HINGE INNER DOOR 30"	1	1
19	D03-0083	80-220° F THERMOSTAT (HI-LIMIT)	1	1
20	D03-0025	SPDT, ON/OFF/ON, 15A	2	4
21	TFH-2045	DPDT, ON/OFF/ON, 15A	1	1
22	D31-0176	1/8" X 1/2" WEATHERSTRIP 21" LONG	2	2
23	D31-0175	1/8" X 1/2" WEATHERSTRIP 30" LONG	1	1
24	D31-0177	INNER DOOR SUPPORT CABLE ASSEMBLY	2	2
25	D31-0174	INNER DOOR PANEL	1	1
	DC-473	FRONT PANEL DECAL	1	1

C-SERIES MULTI-FAN MODEL DRYER

CONTROL BOX, 1 PHASE BACK PANEL

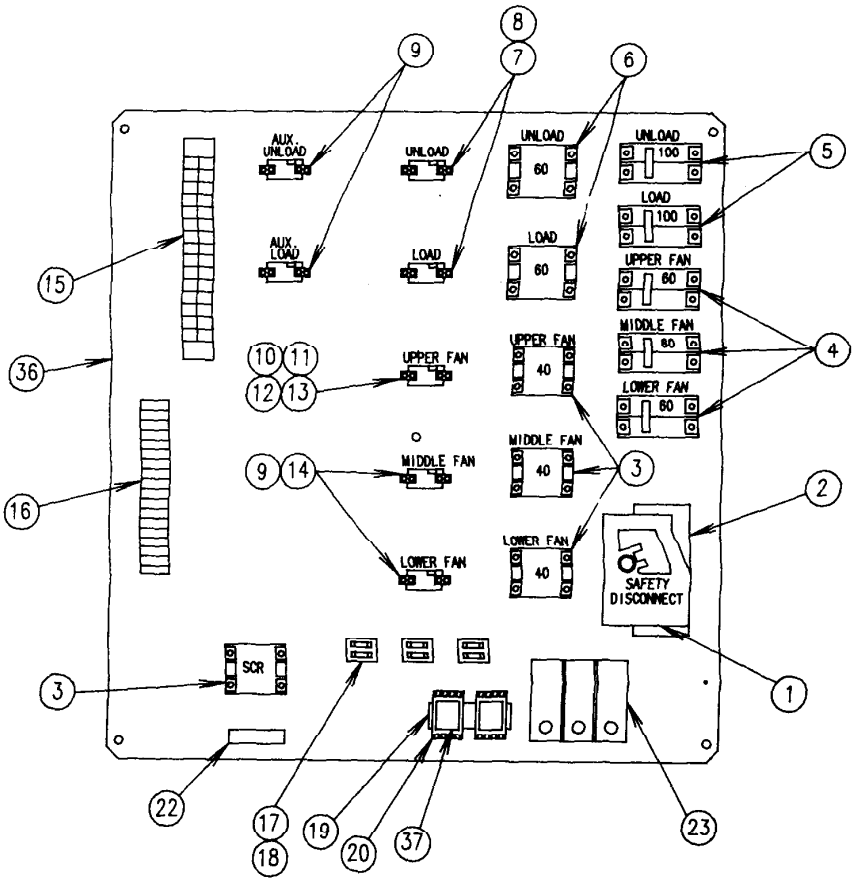

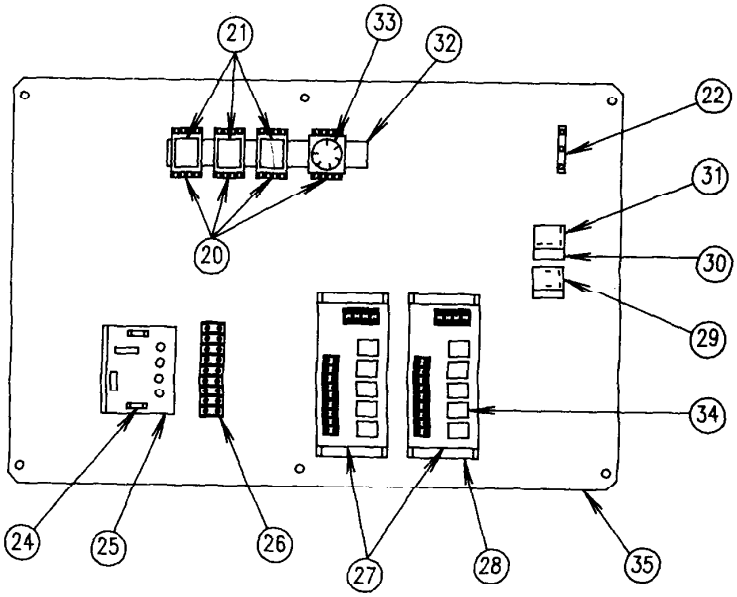

C-SERIES MULTI-FAN MODEL DRYER

CONTROL BOX, 1 PHASE BACK PANEL

REFERENCE NUMBER	PART NUMBER	DESCRIPTION	QTY 410C	425C	510C	525C
1	D04-0007	1 PH DISCONNECT MECHANISM	1	1	1	1
2	D04-0006	225 AMP 1 PH MOLDED CASE SWITCH	1	1	1	1
3	HH-1161	40 AMP GE CONTACTOR	2	4	1	4
	FH-5565	25-40 AMP 120 V COIL GE #55-B20A				
	HH-1162	60 AMP GE CONTACTOR	1		2	
4	D04-0004	60 AMP 2 POLE CIRCUIT BREAKER	1	3	2	3
	D04-0003	100 AMP 2 POLE CIRCUIT BREAKER	1		2	
5	*D04-0003*	*100 AMP 2 POLE CIRCUIT BREAKER*	2	2	2	2
6	HH-1162	60 AMP GE CONTACTOR	3	2	4	2
	FH-5570	50-60-AMP 120 V COIL GE #55-B23A				
7	FH-1003	27 AMP GE OVERLOAD RELAY	2	2	2	2
8	FH-5444	C228B HEATER STRIP	2	2	2	2
9	CH-1027	45 AMP OVERLOAD RELAY	3	4	2	4
10	CH-1027	45 AMP OVERLOAD RELAY		1		1
11	FH-5448	C366B HEATER STRIP				1
	FH-5456	C330B HEATER STRIP		1		
12	FH-6335	90 AMP OVERLOAD RELAY	1		2	
13	FH-5453	F658B HEATER STRIP	1		1	
14	FH-5456	C330B HEATER STRIP	1	2		
	FH-5448	C366B HEATER STRIP				2
	FH-5453	F658B HEATER STRIP			1	
15	D01-0320	85 AMP 16 POSITION TERM. STRIP ASSY	1	1	1	1
16	D03-0031	20 AMP 18 POSITION TERM. STRIP	1	1	1	1
17	FH-1058	DOUBLE FUSE HOLDER	3	3	3	3
18	FH-1059	5 AMP FUSE	5	5	5	5
19	D31-0179	4" RELAY BASE MOUNTING TRACK	1	1	1	1
20	D03-0011	RELAY SOCKET, 8 PIN SURFACE MOUNT	6	6	6	6
21	TFH-2043	DPDT 10 AMP 8 PIN RELAY	3	3	3	3
22	*D03-0074*	*GROUNDING LUG*	*2*	*2*	*2*	*2*
23	D35-0001	POWER DISTRIBUTION BLOCK	1	1	1	1
24		25 AMP SLOW BLOW FUSE	2	2	2	2
25	D03-0033	SCR DRIVE BOARD	1	1	1	1
26	D03-0040	SCR BARRIER TERMINAL KIT	1	1	1	1
27	D01-0233	SHUT-DOWN CIRCUIT BOARD ASSY	2	2	2	2
28	D01-0250	SHUT-DOWN DETECTOR MOUNTING TRACK	2	2	2	2
29	D03-0046	60 SEC N.C. TIME DELAY 115V	1	1	1	1
30	D01-0256	TIME DELAY MOUNTING BRACKET	2	2	2	2
31	D03-0044	10 SEC N.C. TIME DELAY 115V	1	1	1	1
32	D31-0180	12" RELAY BASE MOUNTING TRACK	1	1	1	1
33	D03-0002	LOAD TIMER	1	1	1	1
34	D03-0021	4PDT RELAY 120V	10	10	10	10
35	D31-0117	LOWER CONTROL BOX BACK PANEL	1	1	1	1
36	D31-0093	UPPER CONTROL BOX BACK PANEL	1	1	1	1
37	D33-0003	DPDT 240V 8 PIN RELAY	2	2	2	2

C-SERIES MULTI-FAN MODEL DRYER

CONTROL BOX, 3 PHASE BACK PANEL

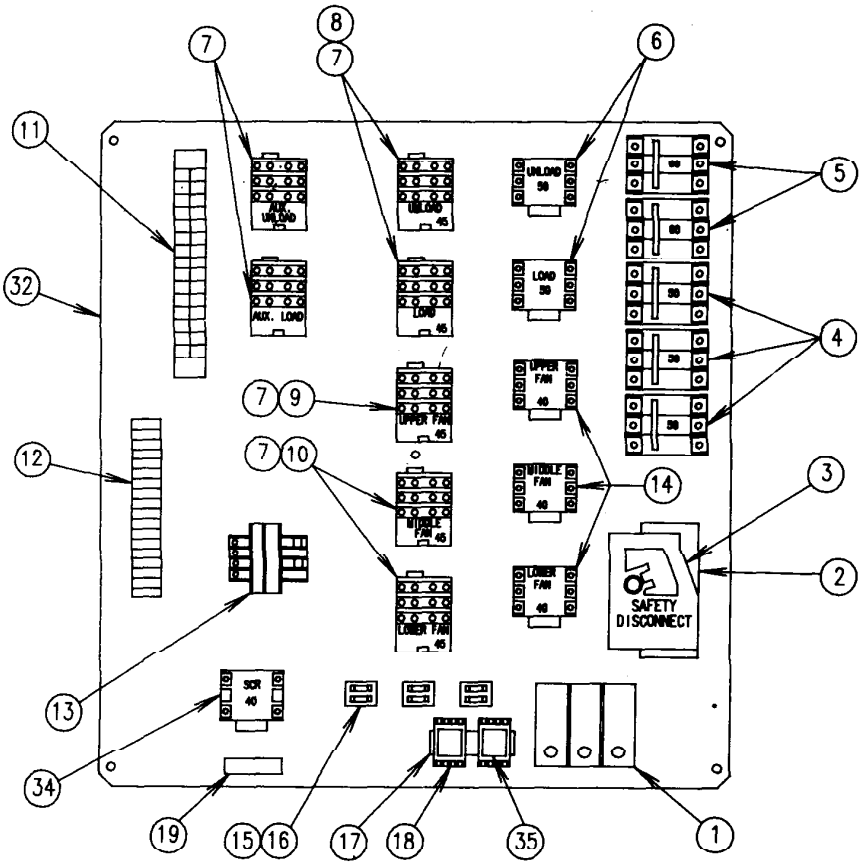

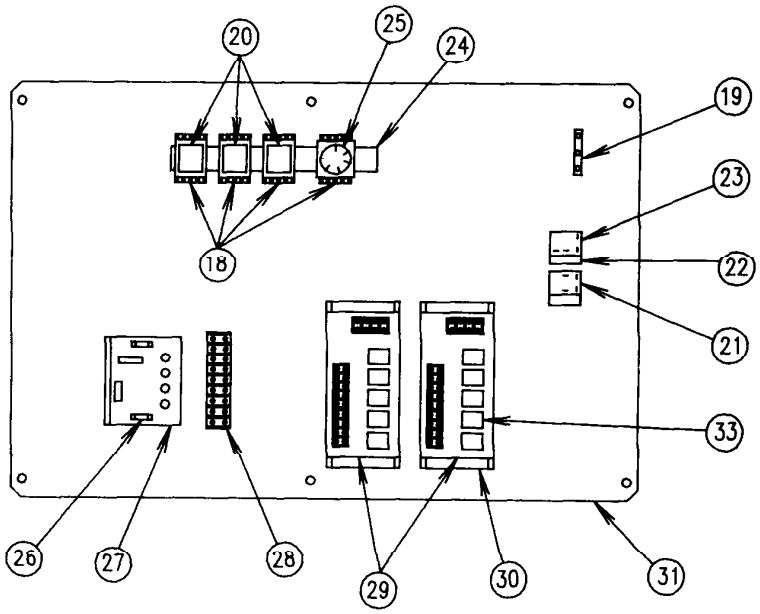

C-SERIES MULTI-FAN MODELS DRYERS

CONTROL BOX, 3 PHASE BACK PANEL

REFERENCE NUMBER	PART NUMBER	DESCRIPTION	QTY 410C	425C	510C	525C
1	D65-0007	POWER DISTRIBUTION BLOCK	1	1	1	1
2	D65-0006	225 AMP 3PH MOLDED CASE SWITCH	1	1	1	1
3	D04-0007	DISCONNECT MECHANISM	1	1	1	1
4	D05-0004	50 AMP 3 POLE CIRCUIT BREAKER	2	3	2	3
5	D35-0002	60 AMP 3 POLE CIRCUIT BREAKER	2	2	2	2
6	D65-0004	50 AMP 3 POLE CONTACTOR	2	2	2	2
	FH-5570	50-60 AMP 120 V COIL GE #55-B23A				
7	D05-0001	45 AMP 3 POLE OVERLOAD RELAY	6	7	6	7
8	FH-5440	C163B HEATER STRIP	6	6	6	6
9	FH-5456	C330B HEATER STRIP	3			
	D05-0013	C440B HEATER STRIP			3	
	FH-5447	C303B HEATER STRIP				3
	FH-5443	C214B HEATER STRIP		3		
10	FH-5443	C214B HEATER STRIP	3	6		
	FH-5447	C303B HEATER STRIP				6
	D05-0013	C440B HEATER STRIP			3	
11	D31-0235	85 AMP 23 POSITION TERM STRIP ASSY	1	1	1	1
12	D03-0031	20 AMP 18 POSITION TERM STRIP	1	1	1	1
13	FH-3807	500 VA CONTROL TRANSFORMER	1	1	1	1
14	D05-0003	40 AMP 3 POLE CONTACTOR	2	3	2	3
	FH-5565	25-40 AMP 120 V COIL G E # 55-B20A				
15	FH-1058	DOUBLE FUSE HOLDER	3	3	3	3
16	FH-1059	5 AMP FUSE	5	5	5	5
17	D31-0179	4" RELAY BASE MOUNTING TRACK	1	1	1	1
18	D03-0011	RELAY SOCKET, 8 PIN SURFACE MOUNT	6	6	6	6
19	D03-0074	GROUNDING LUG	2	2	2	2
20	TFH-2043	DPDT 10 AMP 8 PIN SURFACE MOUNT	3	3	3	3
21	D03-0046	60 SEC N.C. TIME DELAY 115V	1	1	1	1
22	D01-0256	TIME DELAY MOUNTING BRACKET	2	2	2	2
23	D03-0044	10 SEC N.C. TIME DELAY 115V	1	1	1	1
24	D31-0180	12" RELAY BASE MOUNTING TRACK	1	1	1	1
25	D03-0002	LOAD TIMER	1	1	1	1
26		25 AMP SLOW BLOW FUSE	2	2	2	2
27	D03-0033	SCR DRIVE BOARD	1	1	1	1
28	D03-0040	SCR BARRIER TERMINAL KIT	1	1	1	1
29	D01-0233	SHUT-DOWN CIRCUIT BOARD ASSY	2	2	2	2
30	D01-0250	SHUT-DOWN DETECTOR MOUNTING TRACK	2	2	2	2
31	D31-0117	LOWER CONTROL BOX BACK PANEL	1	1	1	1
32	D31-0093	UPPER CONTROL BOX BACK PANEL	1	1	1	1
33	D03-0021	4PDT RELAY 120V	10	10	10	10
34	HH-1161	40 AMP. 2 POLE CONTACTOR	1	1	1	1
35	D33-0003	DPDT 240V 8 PIN RELAY	2	2	2	2

C-SERIES MULTI-FAN MODEL DRYER

24" AND 28" FAN HEATER

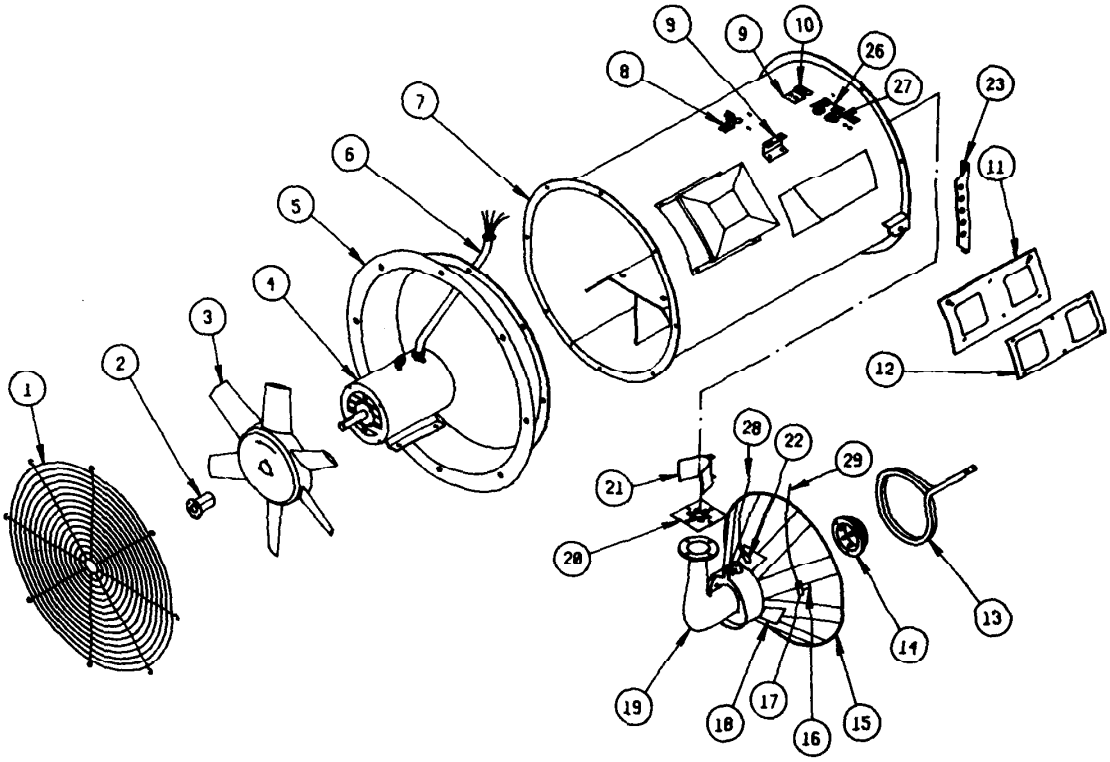

C-SERIES MULTI-FAN MODEL DRYER

24" AND 28" FAN HEATER

REFERENCE NUMBER	PART NUMBER	DESCRIPTION	QTY 24"	QTY 28"
1	TFH-2015	24" GRILL GUARD	1	
	TFH-2007	28" GRILL GUARD		1
2	FH-1119	SPLIT TAPER BUSHING, P1 1 1/8	1	1
3	FH-3568	24" FAN BLADE FINISHED	1	
	TF-1102	28" FAN BLADE FINISHED		1
4	FH-5645	5 - 7 HP 1 PH MOTOR (410C & 425C)	1	
	FH-5646	5 - 7 HP 3 PH MOTOR (410C & 425C)	1	
	FH-5647	7.5 - 10 HP 1 PH MOTOR (525C)	1	
	FH-5648	7.5 - 10 HP 3 PH MOTOR (525C)	1	
	TFH-2050	10 - 15 HP 1 PH MOTOR		1
	TFH-2051	10 - 15 HP 3 PH MOTOR		1
5	TFH-2016	24" VENTURI	1	
	TF-1108	28" VENTURI		1
6	FH-1006	3/4" PLASTIC HOSE	1	
	TF-1103	28" FAN SEAL-TITE ASSEMBLY		1
7	CD-0037	24" FAN HEATER WELDMENT	1	
	CD-0004	28" FAN HEATER WELDMENT		1
8	CD-0048	ORFICE SUPPORT BRACKET	1	
9	CD-0047	SUPPORT BRACKET	1	
	CD-0044	PIPETRAIN SUPPORT BRACKET		1
10	HF-7056	VAPORIZER PIVOT BRACKET(LP only)	1	1
	HF-2024	VAPOR COVER PLATE NAT. GAS ONLY	1	1
11	HF-6064-24	24" ACCESS PANEL WELDMENT	1	
	HF-6064-28	28" ACCESS PANEL WELDMENT		1
12	HF-2025	HEATER COVER PLATE	1	1
13	HF-3093	83 1/4" FORMED VAPORIZER COIL LP ONLY	1	
	HF-3758	89" FORMED VAPORIZER COIL LP ONLY		1
14	HH-1179	24" & 36" FLAME SPREADER	1	
	THF-3144	28" BURNER CUP MACHINED		1
15	HF-992	24" & 26" DIVERTER WELDMENT	1	
	THF-3138	28" DIVERTER WELDMENT		1
16	HF-4625	FLAME PROBE	1	1
17	HF-4485	FLAME PROBE MOUNTING BRACKET	1	1
18	THF-3113	28" DIVERTER BRACKET	3	3
19	HH-3934	24" & 26" MACHINED BURNER GUN	1	
	THF-3141	28" HEATER GUN MACHINED		1
20	HF-978	COLLECTOR PLATE	1	
	THF-3101	28" BURNER SUPPORT PLATE		1
21	HF-985	18" & 24" COLLECTOR WELDMENT	1	1
22	HH-1650	AUBURN SPARK PLUG I-31	1	1
23	D31-0129	DIAGONAL SUPPORT ANGLE	2	
24	CD-0058	34" IGNITION WIRE ASSEMBLY	1	
	CD-0024	30" IGNITION WIRE ASSEMBLY		1
25	CD-0060	31" FLAME PROBE WIRE ASSEMBLY	1	
	CD-0025	30" FLAME PROBE WIRE ASSEMBLY		1
26	HF-7060	VAPORIZER SUPPORT WEILDMENT (LP only)	1	
27	HH-7016	RUBBER GROMMET (LP only)	2	

C-SERIES MULTI-FAN MODEL DRYER

24" AND 28" FAN HEATER CONTROL BOX

REFERENCE NUMBER	PART NUMBER	DESCRIPTION	QTY 24"	QTY 28"
1	HH-1253	14TC31 THERMO DISC, VAPOR HI-LIMIT	1	1
2	TFH-2075	3/8" SEAL-TITE		
3	TFH-2076	3/8" LIQUID TIGHT STRAIGHT CONNECTOR	1	1
4	THH-4064	UNILET TYPE LRL CONDUIT BOX	1	1
5	THH-4020	200°F HI-LIMIT RESET	1	1
6	TFH-2076	3/8" LIQUID TIGHT STRAIGHT CONNECTOR	1	1
7	TFH-2075	3/8" SEAL-TITE		
8	TFH-2077	3/8" LIQUID TIGHT 90° CONNECTOR	1	1
9	S-6381	STRAIN RELIEF CONNECTOR	2	2
10	WR-14-4SJ	SJ 14-4 WIRE		
11	D01-0256	TIME DELAY MOUNTING BRACKET	3	3
12	D03-0046	60 SEC. N.C. TIME DELAY, 115V	1	1
13	D03-0077	10 SECOND NORMALLY OPEN TDR	2	2
14	CD-0036	24" CONTROL BOX WELDMENT	1	
	CD-0009	28" CONTROL BOX WELDMENT		1
15	HF-4624	ELECTRIC FLAME DETECTOR BOARD	1	1
16	F-747	CAPACITOR RETAINER CLIP	1	
	CD-0089	CAPACITOR CLAMP HALF (BALDOR)		2
17		START CAPACITORS (BALDOR)	2	3
18	D03-0034	85 AMP BOX LUG SECT. TERMINAL BLOCK	5	5
19	D03-0035	END SEGMENT, 85 AMP TERMINAL BLOCK	1	1
20	FH-1058	FUSE BLOCK	1	1
21	FH-1059	5 AMP FUSE	2	2

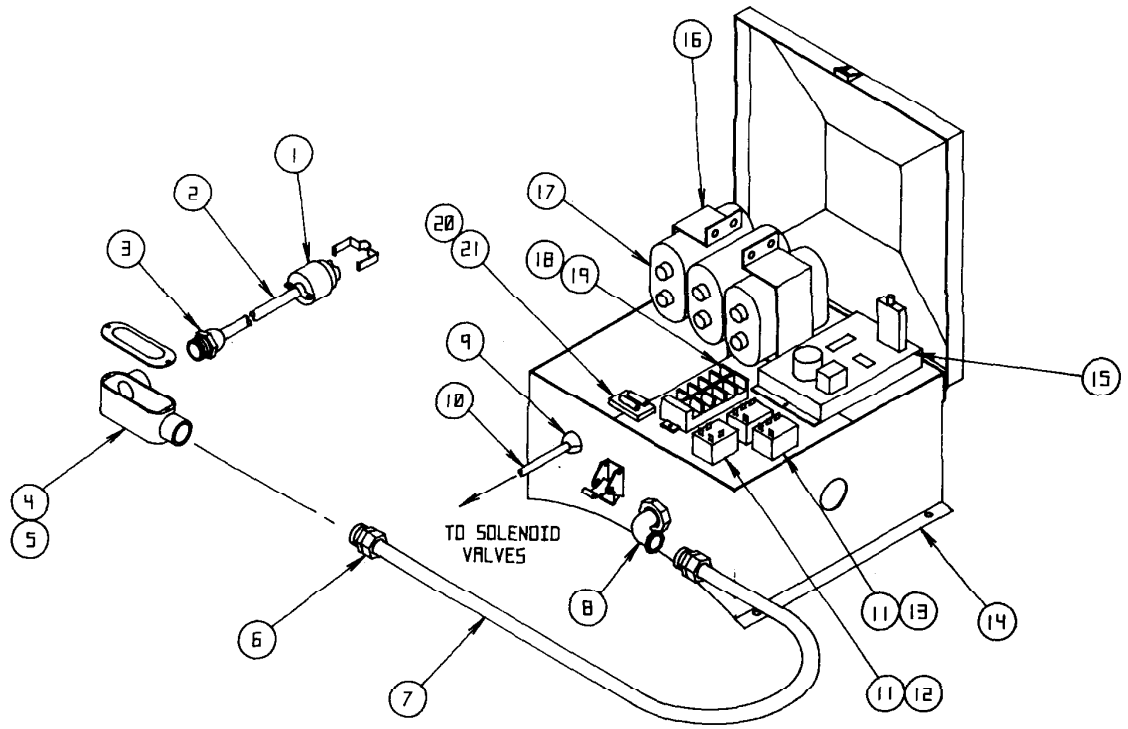

C-SERIES MULTI-FAN MODEL DRYER

24" LP FAN HEATER PIPETRAIN

REFERENCE NUMBER	PART NUMBER	DESCRIPTION	QTY 24"
1	D07-0022	1/2" 90 DEG STREET ELL, SCH 40 BLACK	2
2	THH-4144	1/2" TO 1/4" BELL REDUCER, SCH 80 BLACK	1
3	D07-0005	BRASS CONNECTOR 1/4" NPT x 3/8" TUBE	2
4	THH- 4023	1/2"TO 1/4" NPT SCH 40 BLACK	2
5	HH-1077	1/2" REGULATOR	1
6	HH-2029	1/2" 1 1/2"NIPPLE, SCH 40 BLACK	2
7	D07-0026	1/2" x 1/2" x 1/2" TEE, SCH 40 BLACK	1
8	THH-4019	PROPANE FLOW CONTROL VALVE	1
9	HH-1255	NS-4-8 FLARE NUT	4
10	HH-1254	U1-8D MALE FLARE CONNECTOR	4
11	CD-0086	1/2" COPPER TUBE 28" LONG	2
12	D07-0028	3/4" TO 1/2" HEX REDUCER, SCH 40 BLACK	1
13	THH-4039	3/4" SOLENIOD GAS VALVE	1
	HH3912	120 V COIL JACKES-EVANS #G-23MM	
14	THH-4121	3/4" CLOSE NIPPLE, SCH 40 BLACK	1
15	D07-0021	3/4" 90 DEG STREET ELBOW, SCH 40 BLACK	2
16	HH-1081	1/2" SOLENOID VALVE	1
	HH-3912	120 V COIL JACKES-EVANS #G-23MM	
17	HH-2029	1/2" X 2 1/2" NIPPLE, SCH 40 BLACK	1
18	CD-0045	1/2" BRASS ORFICE PLUG; .218 ORIFICE DIA.	1
19	D07-0025	3/4" CROSS, SCH 40 BLACK	1
20	D07-0027	3/4" TO 1/4" HEX REDUCER, SCH 40 BLACK	1
21	HH-2984	1/4" 30 PSI PRESSURE GAUGE	1
	CD-0045	1/2" BRASS ORIFICE PLUG; .218 ORIFICE DIA.	1
22	HH-1083	1/2" x 5 1/2" NIPPLE, SCH 80 BLACK	1
23	S-540	1/2" 90 DEG ELBOW, SCH 40 BLACK	1
24	D07-0015	1/2" MALE FLARE, 3/4" MALE BRASS UN.	1
25	D07-0009	5/16" x 24" LP GAS HOSE	1

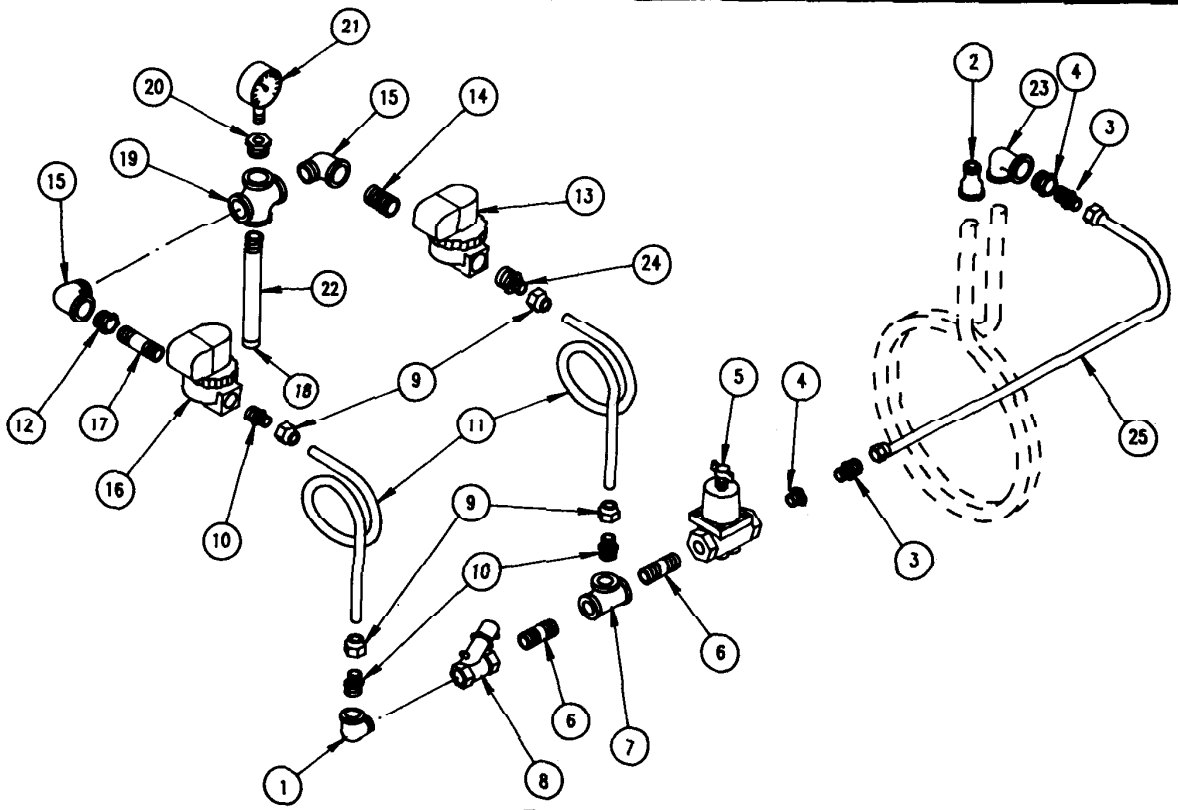

C-SERIES MULTI-FAN MODEL DRYER

28" LP FAN HEATER PIPETRAIN

REFERENCE NUMBER	PART NUMBER	DESCRIPTION	QTY 28"
1	D07-0022	1/2" 90 DEG STREET ELBOW, SCH 40 BLACK	2
2	THH-4144	1/2" TO 1/4" BELL REDUCER, SCH 80 BLACK	1
3	D07-0005	BRASS CONNECTOR 1/4" NPT x 3/8" TUBE	2
4	THH-4023	1/2" TO 1/4" NPT SCH 40 BLACK	2
5	HH-1077	REGULATOR	1
6	HH-2029	1/2" X 1 1/2" NIPPLE, SCH 40 BLACK	2
7	D07-0026	1/2" X 1/2" X 1/2" TEE, SCH 40 BLACK	1
8	THH-4019	PROPANE FLOW CONTROL VALVE	1
9	HH-1255	NS-4-8 FLARE NUT	4
10	HH-1254	U1-8D MALE FLARE CONNECTOR	4
11	CD-0086	1/2" COPPER TUBE 28" LONG	2
12	D07-0028	3/4" TO 1/2' HEX REDUCER, SCH 40 BLACK	1
13	THH-4039	3/4" SOLENOID GAS VALVE	1
	HH-3912	120 V COIL JACKES-EVENS #G-23MM	
14	THH-4121	3/4" CLOSE NIPPLE, SCH 40 BLACK	1
15	D07-0021	3/4" 90 DEG STREET ELBOW, SCH 40 BLACK	2
16	HH-1081	1/2" SOLENOID GAS VALVE	1
	HH-3912	120 V COIL JACKES-EVENS #G-23MM	
17	HH-3670	1/2" X 2 1/2" NIPPLE, SCH 40 BLACK	1
18	THF-3139	28" PROPANE ORIFICE TUBE .25" OR. DIA.	1
	THH-4027	36" PROPANE ORFICE TUBE .297" OR. DIA.	1
19	D07-0025	3/4" CROSS, SCH 40 BLACK	1
20	D07-0027	3/4" TO 1/4" HEX REDUCER, SCH 40 BLACK	1
21	HH-2984	1/4" 30 PSI PRESSURE GAUGE	1
23	S-540	1/2" ELBOW SCH 40 BLACK	1
24	D07-0015	1/2 MALE FLARE, 3/4" MALE BRASS UN.	1
25	D07-0009	5/16" x 24" LP GAS HOSE	1

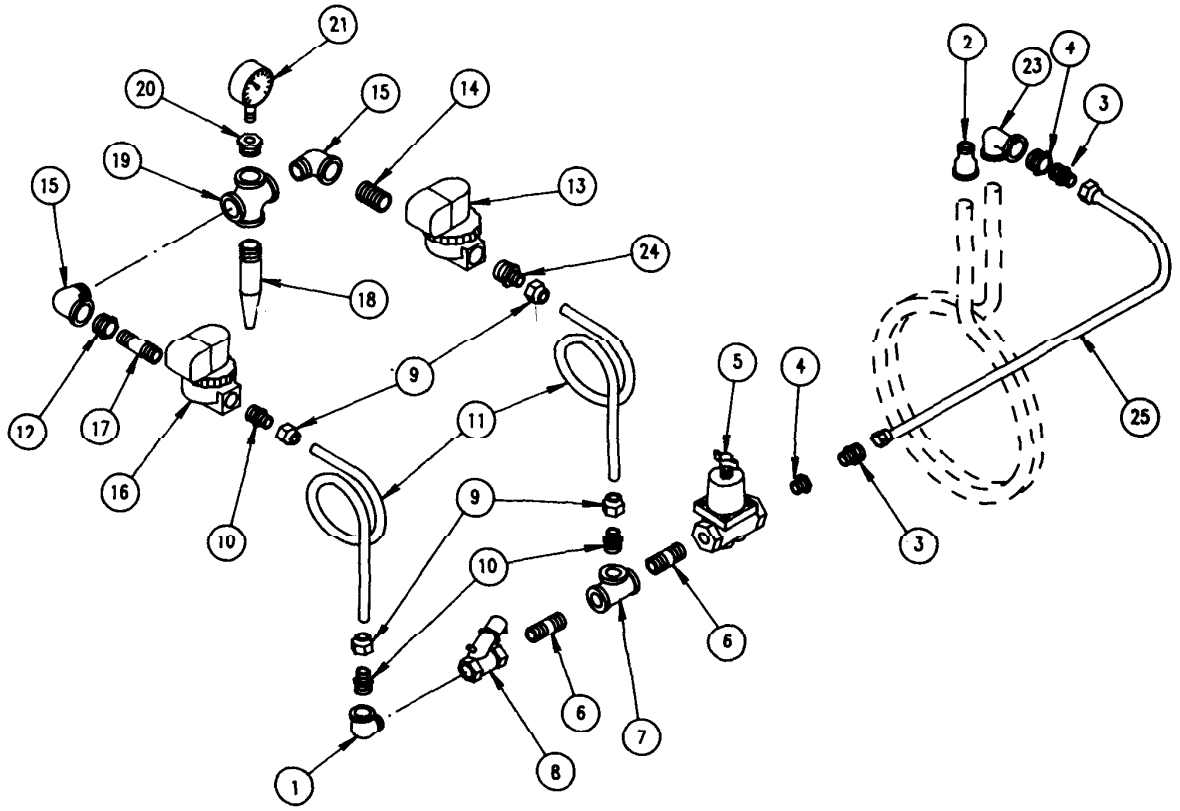

C-SERIES MULTI-FAN MODEL DRYER

NATURAL GAS FAN HEATER PIPETRAIN

REFERENCE NUMBER	PART NUMBER	DESCRIPTION	QTY 24"	QTY 28"
1	D08-0017	1 X 1 X 3/4" TEE SCH 40 BLACK	1	1
2	D08-0003	1 TO 3/4" HEX REDUCER BUSHING SCH 40 BLACK	1	1
3	D68-0003	3/4 X 3 1/2" PIPE TOE SCH 40 BLACK	4	4
4	D58-0004	#65 DRESSER ELBOW 90°SCH 40 BLACK	1	1
5	D58-0002	3/4" BALL SHUT OFF VALVE	1	1
6	D08-0018	3/4 X 4" NIPPLE SCH 40 BLACK	1	1
7	THH-4039	3/4" SOLENOID GAS VALVE	2	2
8	HH-3912	120V COIL JACKES-EVANS #G-23MM		
9	THH-4121	3/4" CLOSE NIPPLE	2	2
10	D07-0021	3/4" STREET ELBOW 90° SCH 40 BLACK	2	2
11	D07-0025	3/4" CROSS SCH 40 BLACK	1	1
12	D07-0027	3/4 TO 1/4" HEX REDUCER SCH 40 BLACK	1	1
13	D08-0022	1/4' LOW PSI PRESSURE GAUGE	1	1
14	D07-0028	3/4 TO 1/2" HEX REDUCER BUSHING SCH 40 BLACK	1	
	HH-1083	1/2 X 5 1/2 NIPPLE SCH 80 BLACK	1	
	CD-0081	1/2" BRASS ORIFICE PLUG .3125" OR. DIA.	1	
	THF-3140	28" NATURAL GAS ORIFICE TUBE .375 OR. DIA.		1
15	D58-0003	#65 DRESSER COUPLING SCH 40 BLACK	1	1

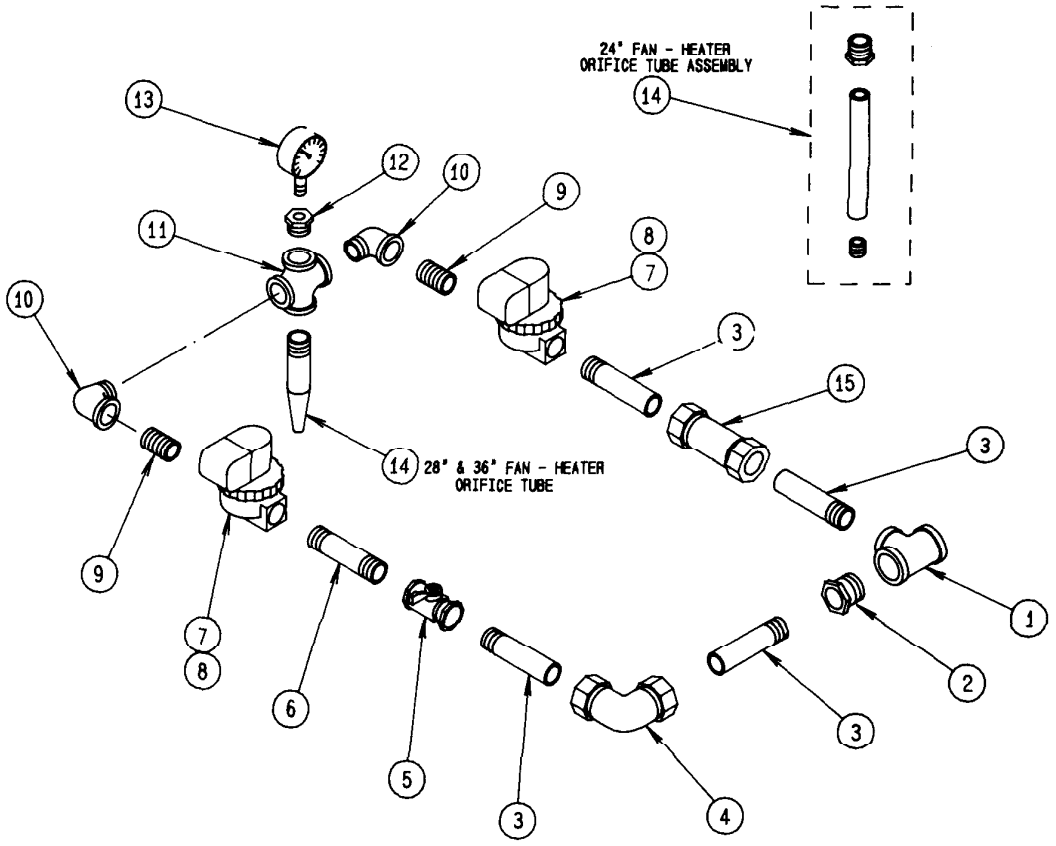

C-SERIES MULTI-FAN MODEL DRYER

LP FUEL SUPPLY

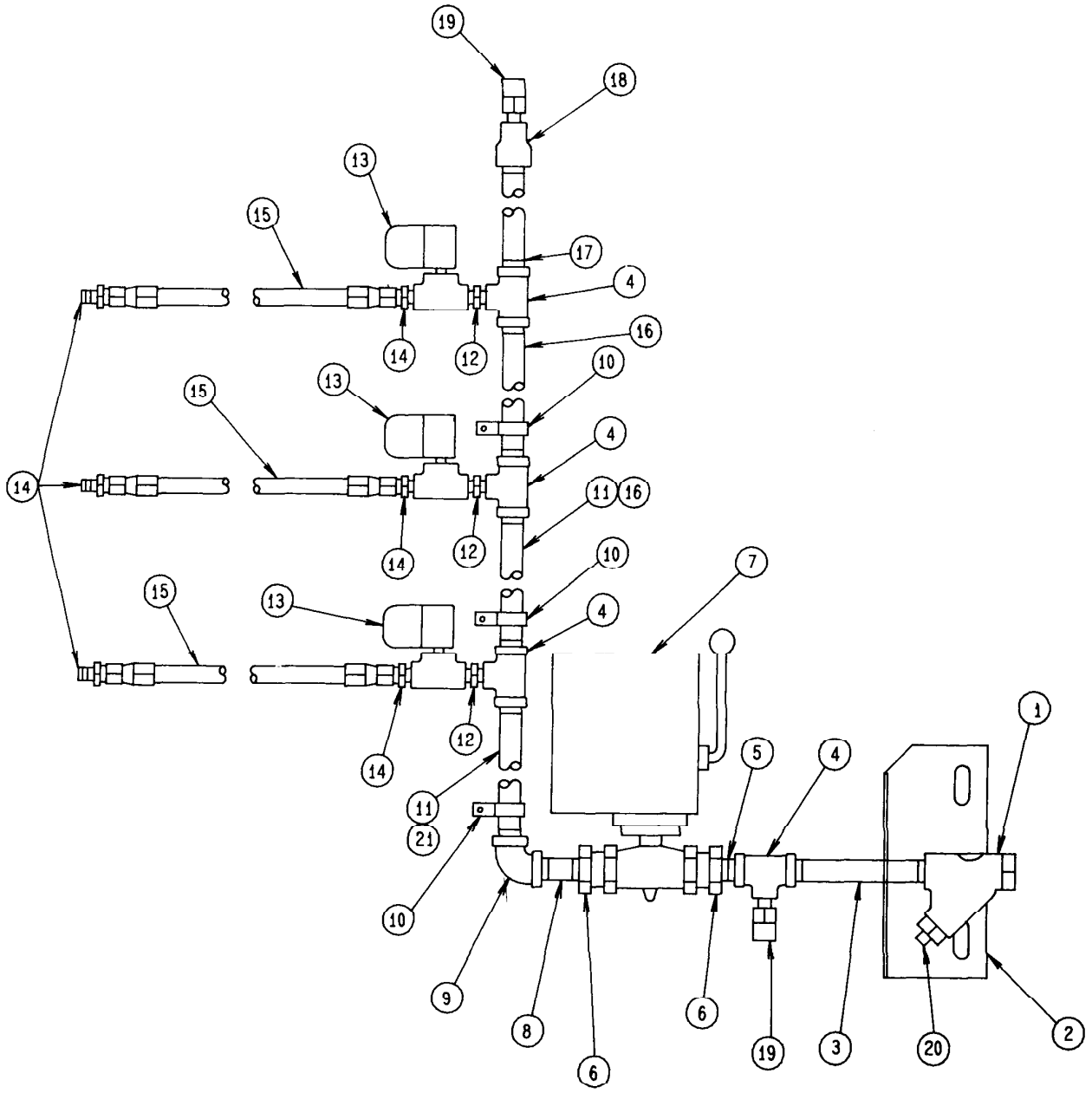

C-SERIES MULTI-FAN MODEL DRYER

LP FUEL SUPPLY

REFERENCE NUMBER	PART NUMBER	DESCRIPTION	QTY 410C	425C	510C	525C
1	HH-1251	1/2" NPT STRAINER, SCH. 80	1	1	1	1
2	D31-0075	GAS VALVE CARRIER BRACKET	1	1	1	1
3	HH-3854	1/2" X 6" NIPPLE, SCH 80 BLACK	1	1	1	1
4	HH-4846	1/2 X 1/2 X 1/4" TEE, SCH. 80 BLACK	3	4	3	4
5	THH-4113	1/2 NPT CLOSE NIPPLE	1	1	1	1
6	D07-0028	HEX REDUCER 3/4 NPT TO 1/2 NPT SCH 40 BLACK	2	2	2	2
7	D28-0001	ELECTRIC SHUT OFF VALVE	1	1	1	1
8	D07-0023	1/2" NPT X 3" NIPPLE. SCH 80 BLACK	1	1	1	1
9	HH-4847	1/2" NPT 90 DEG ELBOW, SCH 80 BLACK	1	1	1	1
10	HH-1096	1/2" CONDUIT CLAMP	3	4	3	4
11	D01-0310	1/2" X 46" NIPPLE, SCH 80 BLACK	2	1	1	1
12	HH-3663	1/4" BRASS NIPPLE	2	3	2	3
13	THH-4029	1/4" NPT LIQUID SOLENOID VALVE	2	3	2	3
14	D07-0005	1/4" NPT - 3/8" FLR MALE BRASS CONNECT	4	6	4	6
15	D07-0009	5/16" X 16" LP GAS HOSE	2	3	2	3
16	D31-0149	1/2 X 31 1/2" NIPPLE, SCH 80 BLACK		2		2
17	D31-0163	1/2" X 20" NIPPLE, SCH 80 BLACK		1	1	1
	D31-0172	1/2 X 28" NIPPLE, SCH 80 BLACK	1		1	
18	THH-4144	1/2" TO 1/4" BELL REDUCER, SCH 80 BLACK	1	1	1	1
19	HH-4845	1/4" NPT 250 PSI RELIEF VALVE	2	2	2	2
20	HH-1504	3/8" PIPE PLUG	1	1	1	1
21	D87-0001	1/2 X 55" NIPPLE SCH 80 BLACK			1	

C-SERIES MULTI-FAN MODEL DRYER

NATURAL GAS FUEL SUPPLY
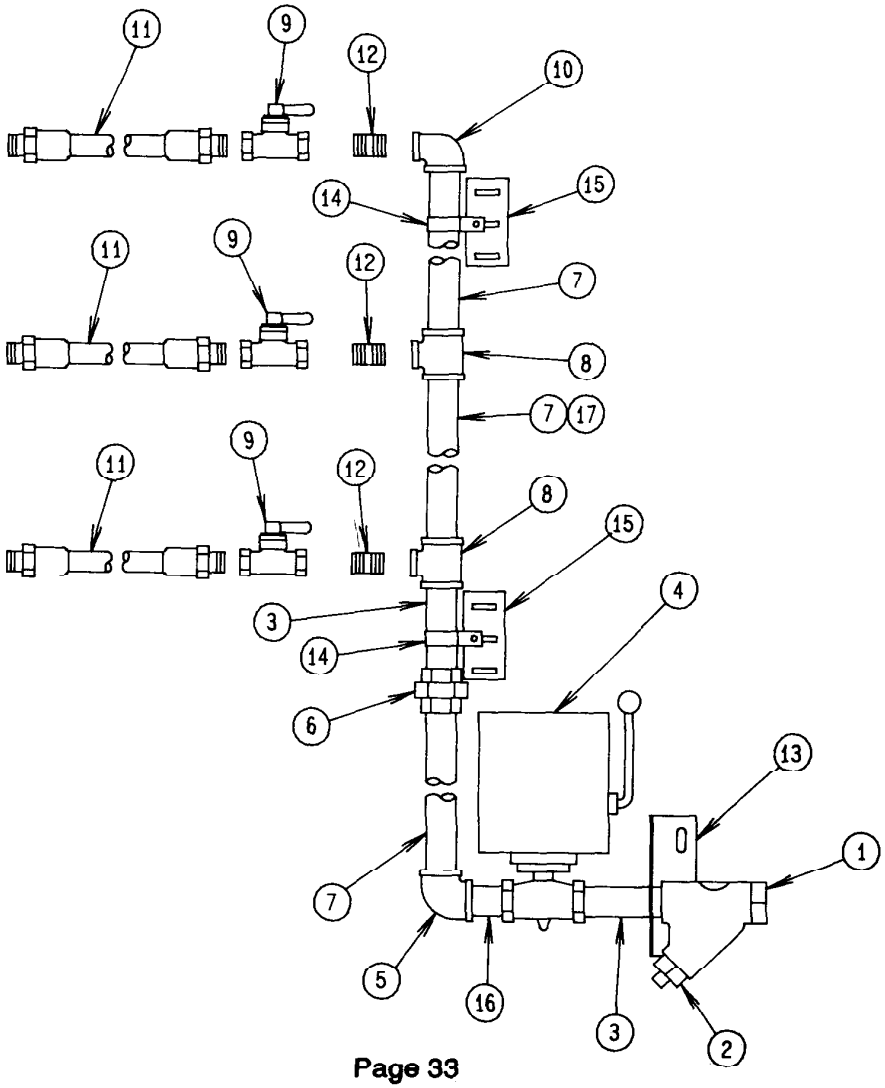
REFERENCE NUMBER	PART NUMBER	DESCRIPTION	QTY 410C/510C	QTY 425C/525C
1	D08-0015	1 1/2" GAS STRAINER SCH 40 BLACK	1	1
2	D08-0014	1" PIPE PLUG SCH 40 BLACK	1	1
3	D08-0028	1 1/2 X 12" NIPPLE SCH 40 BLACK	2	2
4	D08-0016	1 1/2" ELECTRIC SHUT-OFF VALVE	1	1
5	D08-0011	1 1/2" ELBOW 90°SCH 40 BLACK	1	1
6	D08-0010	1 1/2" FEMALE UNION	1	1
7	D38-0005	1 1/2 X 28" NIPPLE SCH 40 BLACK	1	3
8	D38-0001	1 1/2 X 1 1/2 X 1" TEE SCH 40 BLACK	1	2
9	D08-0023	1" SHUT-OFF VALVE	2	3
10	D38-0002	1 1/2 TO 1" REDUCER ELBOW 90° SCH 40 BLACK	1	1
11	D68-0007	1" NPT 36 " LONG MALE GAS HOSE	2	3
12	THH-4117	1" CLOSE NIPPLE SCH 40 BLACK	2	3
13	D51-0045	CARRIER BRACKET	1	1
14	S-6643	1 1/2" CONDUIT CLAMP	2	2
15	D31-0074	GAS MANIFOLD MOUNTING BRACKET	2	2
16	D08-0009	1 1/2" CLOSE NIPPLE SCH 40 BLACK	1	1
17	D28-0003	1 1/2 X 56" NIPPLE SCH 40 BLACK	1