PNEG-1188 105’ INTERNALLY STIFFENED 2 RING DOOR ASSEMBLY INSTRUCTIONS

PRINTED: 4/2002
REVISED: 6/2003

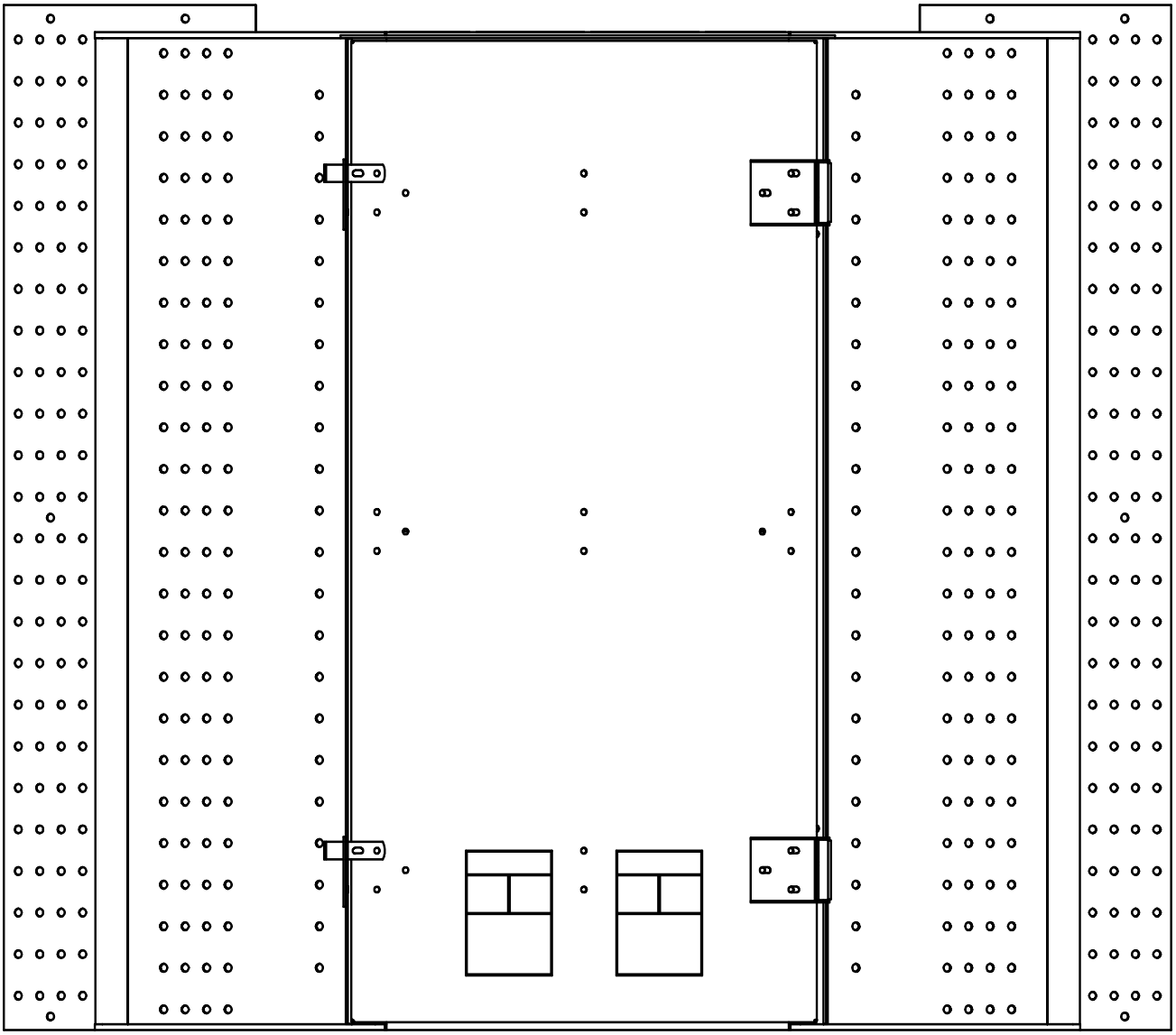

PNEG-1188

SAFETY GUIDELINES

This manual contains information that is important for you, the owner/operator, to know and understand. This information relates to protecting ***personal safety*** and ***preventing equipment problems***. It is the responsibility of the owner/operator to inform anyone operating or working in the area of this equipment of these safety guidelines. To help you recognize this information, we use the symbols that are defined below. Please read the manual and pay attention to these sections. Failure to read this manual and it's safety instructions is a misuse of the equipment and may lead to serious injury or death.

This is the safety alert symbol. It is used to alert you to potential personal injury hazards. Obey all safety messages that follow this symbol to avoid possible injury or death.

DANGER **DANGER** indicates an imminently hazardous situation which, if not avoided, will result in death or serious injury.

WARNING **WARNING** indicates a potentially hazardous situation which, if not avoided, could result in death or serious injury.

CAUTION **CAUTION** indicates a potentially hazardous situation which, if not avoided, may result in minor or moderate injury.

CAUTION **CAUTION** used without the safety alert symbol indicates a potentially hazardous situation which, if not avoided, may result in property damage.

NOTE **NOTE** indicates information about the equipment that you should pay special attention to.

General Safety Statement

The GSI Group, Inc.'s, principal concern is your safety and the safety of others associated with grain handling equipment. This manual is to help you understand safe operating procedures and some problems which may be encountered by the operator and other personnel.

As owner and/or operator, it is your responsibility to know what requirements, hazards and precautions exist and inform all personnel associated with the equipment or in the area. Safety precautions may be required from the personnel. Avoid any alterations to the equipment. Such alterations may produce a very dangerous situation, where serious injury or death may occur.

You should consider the location of the bin site relative to power line locations or electrical transmission equipment. We recommend you contact your local power company to review your installation plan or for information concerning required equipment clearance. Clearance of portable equipment that may be taken to the bin site should be reviewed and considered as well. Any electrical control equipment in contact with the bin should be properly grounded and installed in accordance with National Electric Code provisions and other local or national codes.

This product is intended for the use of grain storage only. Any other use is a misuse of the product!

This product has sharp edges! These sharp edges may cause serious injury. To avoid injury, handle sharp edges with caution and use proper protective clothing and equipment at all times.

Sidewall bundles or sheets must be stored in a safe manner. The safest method of storing sidewall bundles is laying horizontally with the arch of the sheet upward or over like a dome. Sidewall sheets stored on edge must be secured in a way that they cannot fall over and cause injury. Care should be taken in the handling and movement of sidewall bundles.

Personnel operating or working around equipment should read this manual. This manual must be delivered with equipment to its owner. Failure to read this manual and its safety instructions is a misuse of the equipment.

Safety

FOLLOW SAFETY INSTRUCTIONS

Carefully read all safety messages in this manual and on your machine safety signs. Keep signs in good condition. Replace missing or damaged safety signs. Be sure new equipment components and repair parts include the current safety signs. Replacement safety signs are available from the manufacturer.

Learn how to operate the machine and how to use controls properly. Do not let anyone operate without instruction.

Keep your machinery in proper working condition. Unauthorized modifications to the machine may impair the function and/or safety and affect machine life.

If you do not understand any part of this manual and need assistance, contact your dealer.

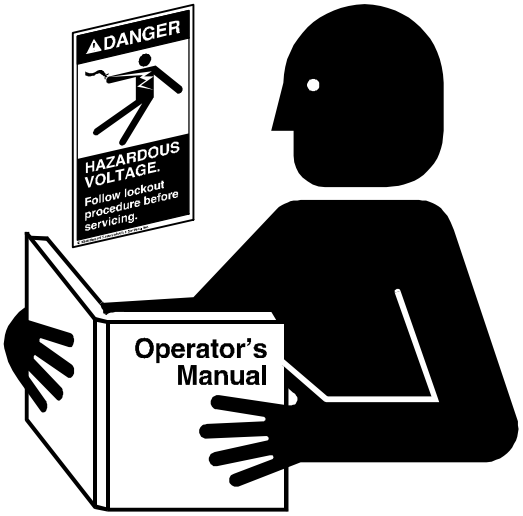

PRACTICE SAFE MAINTENANCE

Understand service procedures before doing work. Keep area clean and dry.

Never lubricate, service, or adjust machine while it is in operation. Keep hands, feet, and clothing from all rotating parts.

Keep all parts in good condition and properly installed. Fix damage immediately. Replace worn or broken parts. Remove any build up of grease, oil, or debris.

PREPARE FOR EMERGENCIES

Be prepared if fire starts.

Keep a first aid kit and fire extinguisher handy.

Keep emergency numbers for doctors, ambulance service, hospital, and fire department near your telephone.

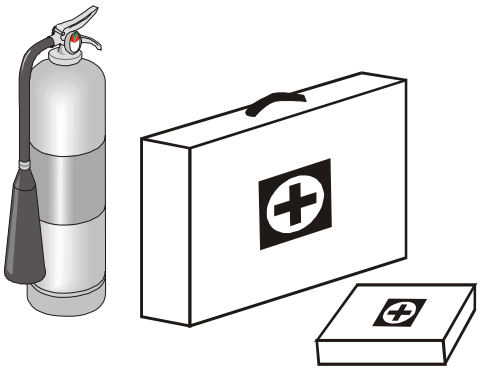

WEAR PROTECTIVE CLOTHING

Wear close fitting clothing and safety equipment appropriate to the job.

Safety glasses should be worn at all times to protect eyes from debris.

Wear gloves to protect your hands from sharp edges on plastic or steel parts.

A respirator may be needed to help prevent breathing potentially toxic fumes and dust.

Wear hard hat and steel toe boots to help protect your head and toes from falling debris.

Eye Protection

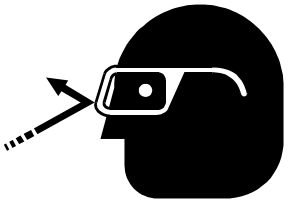

Gloves

Steel Toe Boots

Respirator

Hard Hat

CAUTION!

GSI DOES NOT WARRANT ANY ROOF DAMAGE CAUSED BY EXCESSIVE VACUUM OR INTERNAL PRESSURE FROM FANS OR OTHER AIR MOVING SYSTEMS. ADEQUATE VENTILATION AND/OR "MAKEUP AIR" DEVICES SHOULD BE PROVIDED FOR ALL POWERED AIR HANDLING SYSTEMS. GSI DOES NOT RECOMMEND THE USE OF DOWNWARD FLOW SYSTEMS (SUCTION). SEVERE ROOF DAMAGE CAN RESULT FROM ANY BLOCKAGE OF AIR PASSAGES. RUNNING FANS DURING HIGH HUMIDITY/COLD WEATHER CONDITIONS CAN CAUSE AIR EXHAUST OR INTAKE PORTS TO FREEZE.

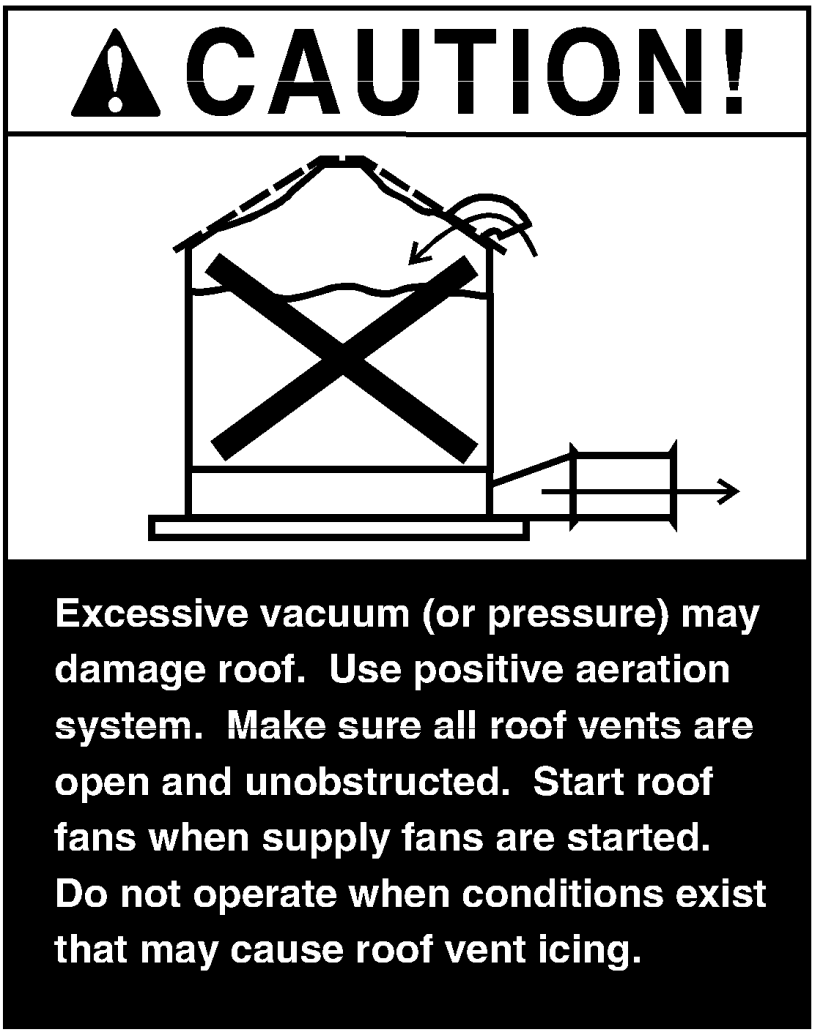

Safety Decal

ATTENTION: The decal shown below should be present on the inside of the door cover of the two ring door, 24" porthole door cover and the roof manway cover. If a decal has been damaged or is missing in any of these locations contact the manufacturer for a free replacement decal.

DECALS
P.O. BOX 20
ASSUMPTION, IL. 62510-0020
(217) 226-4421

ATTENTION: The decal shown below should be present on the outside of the door cover on the two ring door, 24" porthole door cover and roof manway cover. If a decal has been damaged or is missing in any of these locations contact the manufacturer for a free replacement decal.

DECALS
P.O. BOX 20
ASSUMPTION, IL. 62510-00020
(217)-226-4421

Safety Sign-Off Sheet

It is necessary for the employer to train the employee in the safe operating and safety procedures for this equipment. We included this sign-off sheet for your convenience and personal record keeping. All unqualified persons are to stay out of the work area at all times. A person who has not read this manual and does not understands all operating and safety instructions is not qualified to operate this equipment.

DATE	EMPLOYER'S SIGNATURE	EMPLOYEE'S SIGNATURE
	1	
	2	
	3	
	4	
	5	
	6	
	7	
	8	
	9	
	10	
	11	
	12	
	13	
	14	
	15	
	16	
	17	
	18	
	19	
	20	
	21	
	22	
	23	
	24	
	25	
	26	
	27	
	28	
	29	
	30	
	31	
	32	
	33	
	34	
	35	
	36	
	37	
	38	
	39	
	40	

Introduction

READ THIS MANUAL carefully to learn how to properly use and install equipment. Failure to do so could result in personal injury or equipment damage.

INSPECT the shipment immediately upon arrival. The Customer is responsible for ensuring that all quantities are correct. Report any damage or shortages by recording a detailed description on the Bill of Lading to justify the Customer's claim from the Transport Firm. Our responsibility for damage to the equipment ends with acceptance by the delivering carrier. Save all paperwork and documentation furnished with any of the equipment/components.

THIS MANUAL SHOULD BE CONSIDERED a permanent part of your equipment and should be easily accessible when needed.

WARRANTY is provided as part of the company's support program for customers who use and maintain their equipment as described in the manual. The warranty is explained on the warranty page located on the inside back cover of this manual.

This warranty provides you the assurance that the company will back its products where defects appear within the warranty period. In some circumstances, the company also provides field improvements, often without charge to the customer, even if the product is out of warranty. Should the equipment be abused, or modified to change its performance beyond the factory specifications, the warranty will become void and field improvements may be denied.

Properly Store Grain Bin/Silo Materials Prior to Construction to Prevent Wet Storage Stain:

Wet storage stain (rust) will develop when closely packed bundles of galvanized material such as sidewall and roof sheets have moisture present from any source. Roof and sidewall bundles should be inspected on arrival for the presence of moisture. If moisture is present, moisture must not be permitted to remain between the sheets. In the case of moisture presence, sheets or panels should be separated immediately, wiped down, dried and sprayed with a light oil or diesel fuel.

Where possible, sidewall bundles, roof sheets and other closely packed materials should be stored in a dry climate controlled building. Storage inside a dry building should be done if at all possible. Where outdoor storage is unavoidable, the materials should be raised out of contact from the ground or vegetation. Stacking and spacing materials should not be corrosive or wet. Materials must be protected from the weather. Weather protection that permits more air movement around the bundles are best.

The storage method of the roof bundles and sidewall sheets may also help minimize moisture presence. Roof bundles should be stored inclined. The bundles should be stored and secured in a stable safe manner. Turning the bundles over and storing with the center of the dome “up” like a arch is a option. Sidewall bundles may be stored on edge, **however these bundles should be secured in such as way as they cannot fall over and cause injury.**

Should “white rust” or “wet storage stain” occur, contact GSI immediately concerning methods to minimize the adverse effect upon the galvanized coating.

IMPORTANT NOTE:

This GSI Commercial Two Ring Door is designed for use in the 2.66” corrugation NCL series of tanks manufactured after 1991 utilizing the “universal” or hat shaped stiffener. This door is intended for use with a tank specifically structured for the installation of the two ring door. Special sidewall sheets are provided as part the tank sidewall bundles. You must consult with GSI concerning retrofitting into any existing GSI manufactured tank.

The door package NCWT0136 is designed for use in 105’ / 32 meter diameter tanks with a maximum eave height = 88’-2” / 26.87 meters and internal stiffeners.

You should not attempt to install this door in any 2.66”corrugation GSI “Z” stiffener tank (pre 1991 series).

This door should not be installed in any GSI 4” corrugation series tank..

Consult with GSI concerning retrofitting into any existing GSI manufactured tank to determine compatibility of the door package with the existing sidewall and stiffener configuration.

This door should not be installed in any tank not manufactured by GSI.

Written Instructions for Installation of a NCWT0136 (105' Diameter Bin / Silo) Two Ring Door Package in a Internally Stiffened Tank

1.) The commercial two ring door is installed in the bottom two rings.

2.) The door should normally be placed in line with the conveyor. An intermediate discharge well should be located near the wall to clear grain from the area of the access door (as with any access door).

3.) The door has an inside frame weldment / assembly and an external frame weldment. If the tank has not been erected, the internal frame weldment should be placed inside the tank before erection. If the tank has been erected or erection has begun, it will be necessary to remove sidewall and stiffeners in the door placement area to place the inside frame weldment.

    The internal door frame stiffener will mount at the standard internally stiffened tank anchor bolt location (ref. page 8 of 11). If bolts have been pre-placed then place the frame and stiffeners over the pre-placed bolts. If drill in anchors are to be used it is recommended the holes be pre-drilled at the proper location.

4.) The stiffeners are mounted in the frame directly under the tank stiffener columns (ref. page 9 of 11). For the case of the internally stiffened tank these stiffeners will be mounted in the internal frame. The frame should have the stiffeners already in place with two bolts to hold them in location. These bolts must be removed to install the sidewall to jamb connecting plates. However, the stiffeners may be left in this position in the frame. The stiffeners will mount in the frame such that the tank stiffener will bear directly above it. Should the stiffeners not be so placed, they should be placed in that location.

5.) Left and Right hand jamb plates (NCWT0131L & R) are provided for attachement of the sidewall sheets to the door frame. The jamb plate will mount between the internal and external frame. Place the jamb plate between the internal and external frame and bolt the frame, plate and stiffener together utilizing 7/16" diameter bolts. Utilize 7/16" x 2 1/2" (ref. page 10 of 11) bolts for the plate to jamb connection. For the stiffener to jamb to plate connection 7/16" x 3" bolts should be used as well. A special recessed nut is provided that should be used with the 7/16" bolts. At the jamb plate to frame connection install the bolts with the head and sealing washer on the outside of the tank. At the stiffener to frame to plate connection install the bolts with the head and sealing washer on the outside of the tank.

    The internal door panel hinges will mount inside of the stiffener utilizing the frame to stiffener bolts (on the inside of the tank). Place an additional sealing washer under the hinge at those bolt locations before bolting it in place. Place hinges as shown on the attached diagrams.

6.) The sidewall sheets to the left and right of the door will mount to the outside of the jamb plate. Two special short sidewall sheets (44") and two standard length (119"), standard punched sheets are provided. Attach the sidewall to the jamb plate utilizing 7/16" diameter x 2.1/2" long bolts (ref. page 10 of 11) (see special note below). Special recessed nuts are provided for installing these bolts. Corrugated sealing strip, CWT-0053 is provided. This may be mounted at the outer edge and inner edge of the jamb plate to sidewall interface. Caulk around the seal strip as well. Bolt heads / sealing washers should be on the outside of the tank for this connection.

Written Instructions for Installation of a NCWT0136 (105' Diameter Bin / Silo) Two Ring Door Package in a Internally Stiffened Tank

Note: The tank eave height will affect the size and diameter of the bolts used. For 2.66" corrugation tanks 22 rings (58'-10" / 17.94 meter) eave height and shorter 3/8" diameter x 2" long bolts will be used to connect the sidewall to the jamb plate. A special sidewall hardware bolt package will be incorporated into the tanks for this case.

For some sidewall thicknesses the use of a flat washers may be required under the nut to insure a tight connection. The horizontal seam of the sidewall sheet above the door header will bolt to the jamb plate where it extends above the door frame. The sidewall will be on the exterior of the plate. Install base angle (B-6753 or B-6773) at the area the plate does not extend above. Utilize silicon caulk as necessary to seal this location.

Standard base stiffeners will mount directly above the frame stiffener. Shim as necessary for firm support and bolt the stiffeners together using a 3/4" bolt, nut, and washers.

7) Bearing pins, WD-6224 (8), are mounted to the inside frame flange at the 8 large / .65" x .75" slots. Use S-2741, 5/16" x 1.1/2" bolts and attach the pin at these locations by inserting the grooved pin into the hole and running the 5/16" bolt to the inside (ref. Page 5 of 11). Use 5/16" washer (S-845) and 5/16" flange head nut (S-3611) to secure bearing pin.

8) Assemble the door handle reinforcement angles, door handles, latches and hinges to the top and bottom inner door panels as shown in the assembly sketches (ref. Pages 3-4 of 11). Install the 1/2" x 1.1/2" bolts in the outer door frame at four locations and thread the door latch bar holder (WD-6234) onto the bolt. The door handle will mount over these holders when installed. Utilize washers if necessary to adjust the latch bar holder position (ref. Page 5 of 11). Mount the door panel onto the 4 bearing pins and lock the latches over the latch bar holder. Then attach the door panel hinges to the frame hinges.

9) Attach the outer cover angles (NCWT0168) to the outer frame weldment with 5/16" x 1.1/4" bolts. Use a 5/16" flat washer on all connections (ref. Page 2 of 11).

10.) Attach the latch plates (NCWT0166) and outer cover hinge weldments (NCWT0165) to the outer cover angles as shown on page 2 of 11. Use 5/16" x 1.1/4" bolts for all connections. Remove the sealing washer from the 5/16" bolt and replace ir with a flat washer. The sealing washer will be used under the nut on the outside of the latch plates and hinge weldments.

11.) Assemble the outer cover as shown in the assembly sketch (ref. Page 11 of 11). Attach the door reinforcement channels (NCWT0162), retaining brackets (WD-033), and the outer cover hinges (NCWT0170) to the outer cover as shown. Use 5/16" x 3/4" bolts for all reinforcement channel connections and 5/16" x 1./4" bolts for all hinge and retaining bracket connections. The bolt head and sealing washer should be on the outside for all of these connections. An additional sealing washer may be placed between the hinge/retaining bracket and the outer cover. Adjust the hinges until the cover opens and closes smoothly. Check to insure that the unloading decals (DC-GBC-2A and DC-GBC-2S) are installed on the outside of the outer door cover. Check to insure that the danger decals (DC-GBC-1A and DC-GBC-1S) are installed on the inside of the outer door cover. If the decals are damaged or missing please contact GSI for replacement.

12.) Caulk as necessary at the top and bottom juncture of the door frame and the sidewall and foundation.

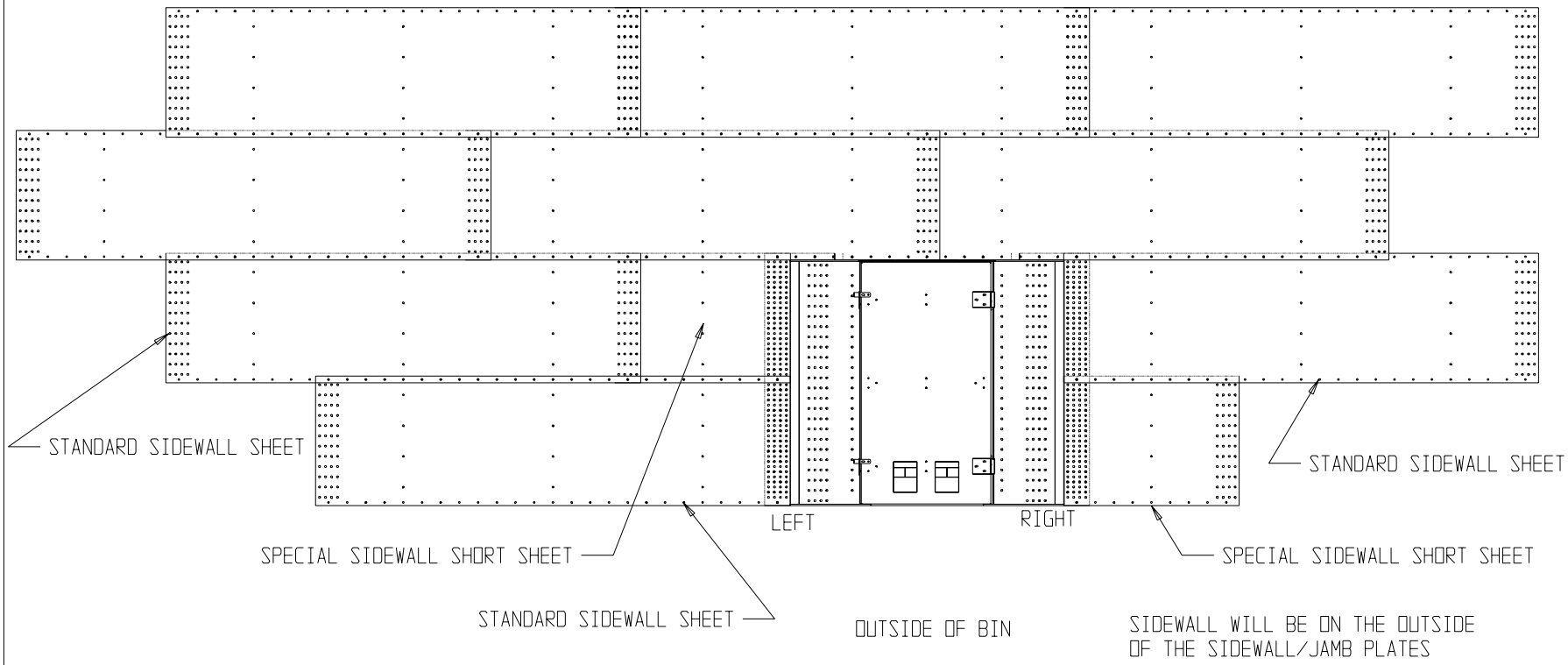

SIDEWALL LAYOUT

PNEG-1188

No.	ECN	Revision Description	Date	By
2	4729	REDESIGNED OUTER DOOR COVER	4/2/03	KDK

A DIVISION OF THE GSI GROUP, INC.
Assumption, Il. 62510 217/226-4421

2 RING DOOR ASSEMBLY
105' INTERNALLY STIFFENED

TOLERANCES (Unless Noted)
Fractions +/- 1/32"
Decimals +/- .031"
Angles +/- _ _ _ _ _

Quantity			Material
Sq. Ft.	Blk. Wt.	Ship Wt.	
Drn. By TJH	Date 4/26/02	Scale N.T.S. Work to Dimensions Do Not Scale	Drawing No. PAGE 1 OF 11
Chk'd By	Date		

REV. 6/30/03

NOTE: THE DOOR STIFFENERS (NCWT0137) ARE SECURED IN THE INNER FRAME WITH (4) BOLTS FOR SHIPPING PURPOSES. THE PART NUMBER FOR THIS ASSEMBLY IS NCWT0125. REMOVE THESE BOLTS BEFORE ALIGNING LEFT AND RIGHT JAMB PLATES.

THE INNER DOOR PANELS ARE SHOWN ASSEMBLED. SEE PAGES 3 AND 4 FOR PANEL ASSEMBLY DETAILS.

ITM	PART #	QTY	DESCRIPTION
1	NCWT0125	1	NCWT0052 FRAME WITH STIFFENERS
2	NCWT0131L	1	SIDEWALL CONNECTOR PLATE
3	NCWT0131R	1	SIDEWALL CONNECTOR PLATE
4	NCWT0053	1	OUTER DOOR FRAME WELDMENT
5	NCWT0128	6	INNER HINGE HOUSING
6	NCWT0062_ASSEMB	1	TOP INNER DOOR ASSEMBLY
7	NCWT0063_ASSEMB	1	BOTTOM INNER DOOR ASSEMBLY
8	NCWT0161_ASSY	1	OUTER COVER ASSEMBLY W/ DECALS

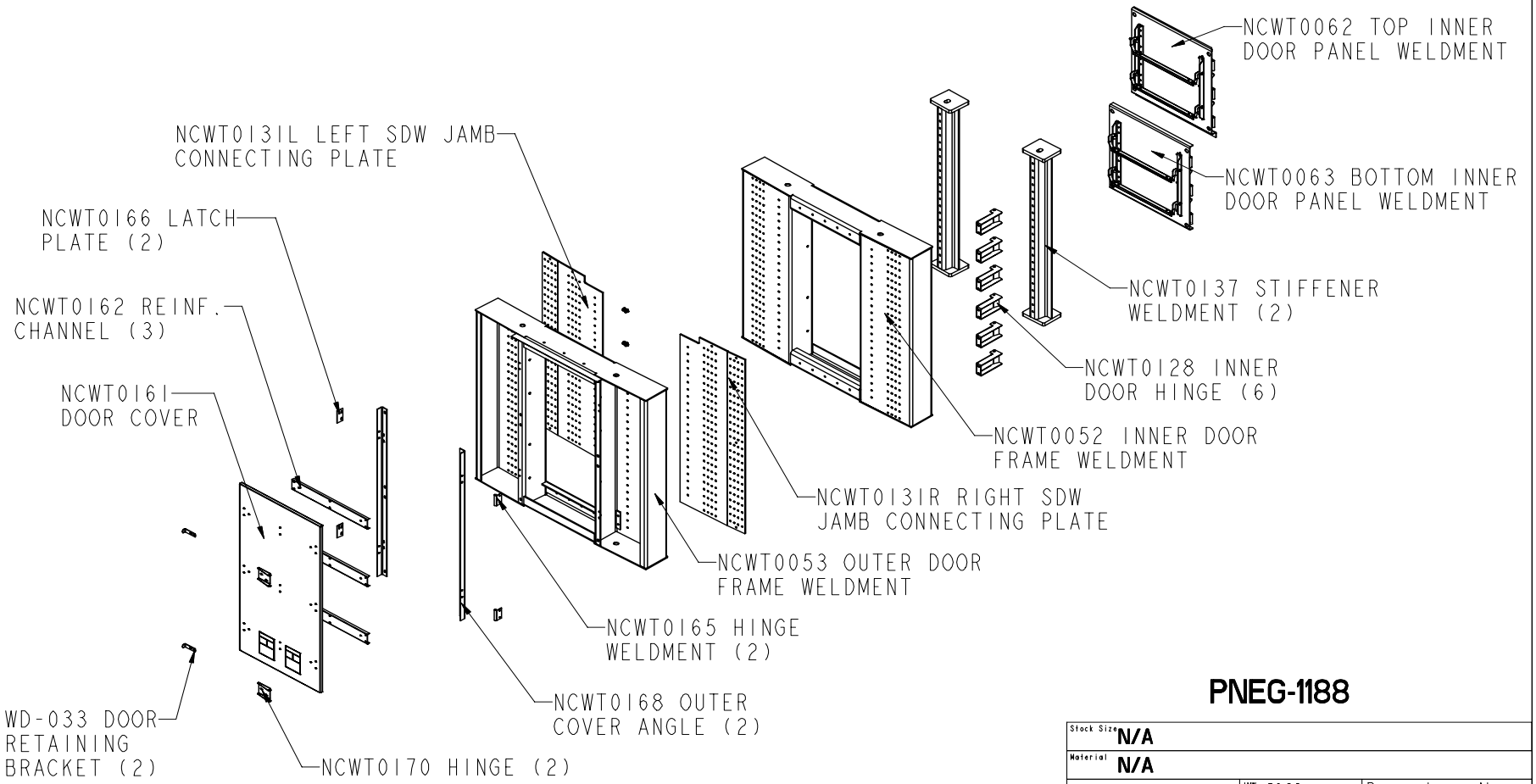

PNEG-1188

No.	ECN	Revision Description	Date	By
2	4729	REDESIGNED OUTER DOOR COVER	4/2/03	KDK
		REV. STIFF WELD. # FROM	8/9/02	TJH
		NCWT0056 TO NCWT0137		

THE GSI GROUP
Assumption, IL
Engineering Division: GRAIN SYSTEMS

2 RING DOOR ASSEMBLY
105' INTERNALLY STIFFENED

TOLERANCES (Unless Noted)
Fractions +/- 1/32"
Decimals +/- .031
Angles +/- 1.00

Stock Size: N/A
Material: N/A
Sheet 1 of 2
IMW: N/A
Weight Index: N/A
Sq. Ft.: N/A
Ship Wt.: 2148.810
Drawn By: TJH
Date: 24-Apr-02
Scale: NONE
Checked By: TBD
Date: 00-00-00
Work to Dimensions Do Not Scale

Drawing No.
PAGE 2 OF 11

REV. 6/30/03

ITM	PART #	QTY	DESCRIPTION
1	NCWT0063	1	BOTTOM INNER DOOR WELDMENT
2	NCWT0158	2	DOOR REINF. ANGLE
3	WD-6040	4	LATCH BUSHING
4	WD-6038	2	INSIDE PANEL LATCH - RIGHT
5	WD-6037	2	INSIDE PANEL LATCH - RIGHT
6	S-4303	4	SCREW 5/16x3/4
7	NCWT0066	2	LATCH BAR
8	NCWT0018	3	HINGE WELDMENT

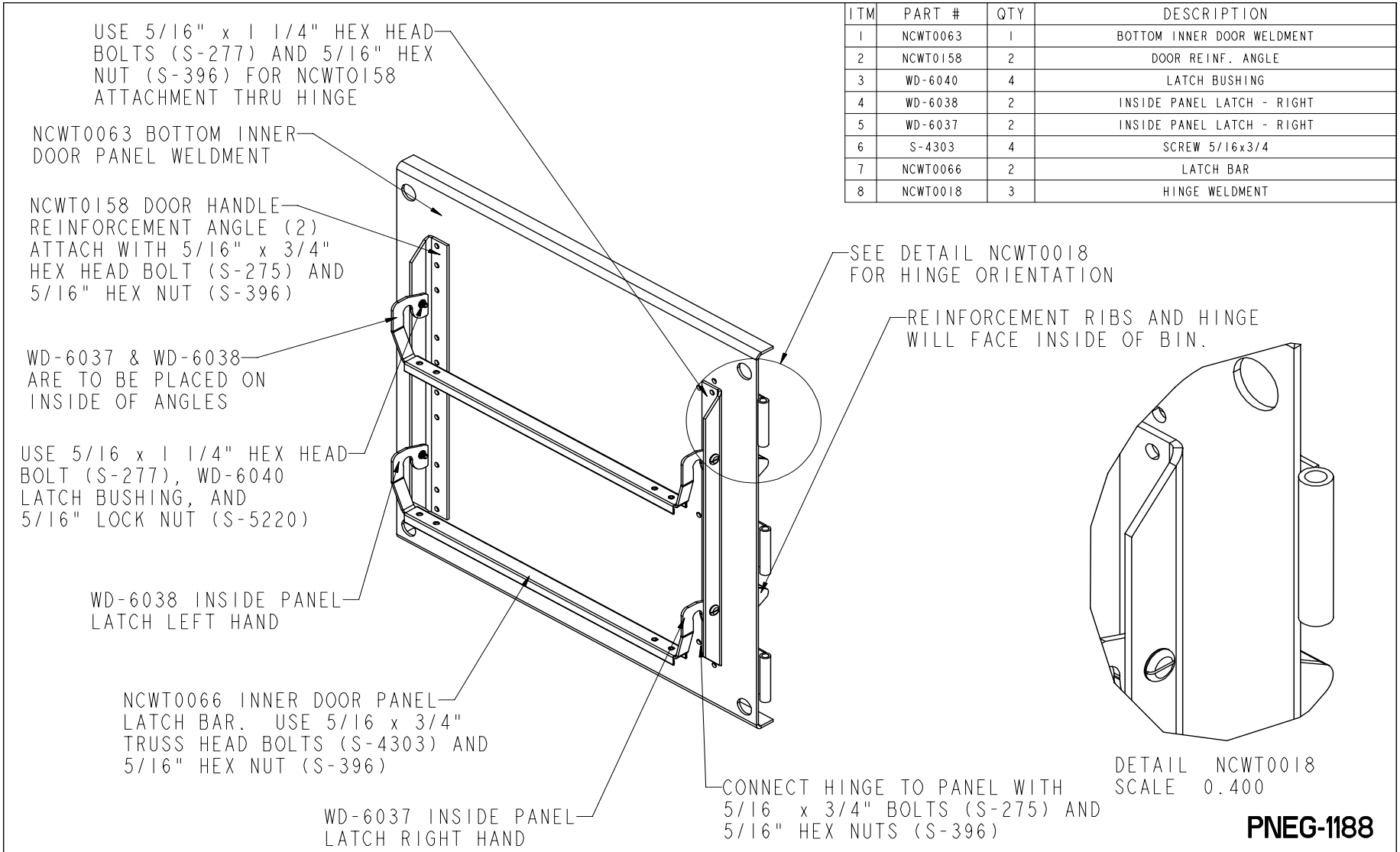

PNEG-1188

BOTTOM INNER PANEL ASSEMBLY

Stock Size	N/A			
Material	N/A			
Sheet 1 of 1		IMW N/A		Drawing No.
Weight Index N/A	Sq. Ft. N/A	Ship Wt. 97.376		PAGE 3 OF 11
Drawn By TJH	Date 2-Apr-03	Scale NONE		
Checked By TBD	Date 00-00-00	Work to Dimensions Do Not Scale		

No.	ECN	Revision Description	Date	By

THE GSI GROUP
Assumption, IL
Engineering Division: GRAIN SYSTEMS

2 RING DOOR ASSEMBLY
105' INTERNALLY STIFFENED

TOLERANCES (Unless Noted)
Fractions +/- 1/32"
Decimals +/- .031
Angles +/- 1.00

REV. 6/30/03

ITM	PART #	QTY	DESCRIPTION
1	NCWT0062	1	TOP INNER DOOR WELDMENT
2	NCWT0158	2	DOOR REINF. ANGLE
3	WD-6038	2	INSIDE PANEL LATCH - RIGHT
4	WD-6037	2	INSIDE PANEL LATCH - RIGHT
5	WD-6040	4	LATCH BUSHING
6	S-4303	4	SCREW 5/16x3/4
7	NCWT0066	2	LATCH BAR
8	S-8648	1	SCREW SHCS 1/2-13 X1
9	NCWT0018_ASSEMBLY	3	-

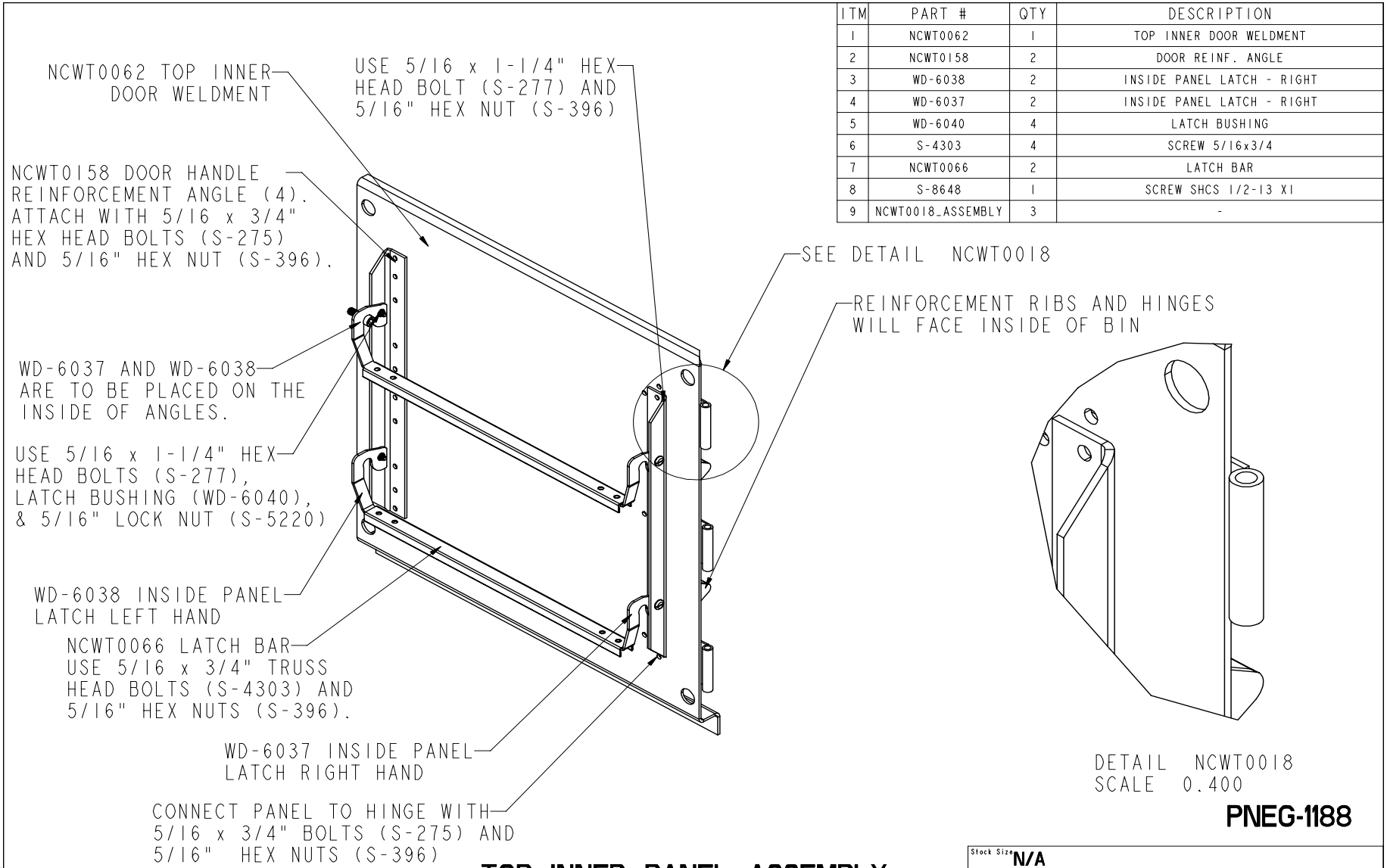

PNEG-1188

TOP INNER PANEL ASSEMBLY

No.	ECN	Revision Description	Date	By

THE GSI GROUP
Assumption, IL
Engineering Division: GRAIN SYSTEMS

2 RING DOOR ASSEMBLY
105' INTERNALLY STIFFENED

TOLERANCES (Unless Noted)
Fractions +/- 1/32"
Decimals +/- .031
Angles +/- 1.00

Stock Size: N/A
Material: N/A
Sheet 1 of 1
IMW: N/A
Weight Index: N/A
Sq. Ft.: N/A
Ship Wt.: 101.355
Drawn By: TJH
Date: 25-Apr-02
Scale: NONE
Checked By: TBD
Date: 00-00-00
Work to Dimensions Do Not Scale

Drawing No.
PAGE 4 OF 11

REV. 6/30/03

ITM	PART #	QTY	DESCRIPTION
1	NCWT0052	1	INNER FRAME ASSEMBLY
2	NCWT0137	2	STIFFENER WELDMENT
3	WD-6234	4	LATCH BAR HOLDER
4	PRT0001	4	

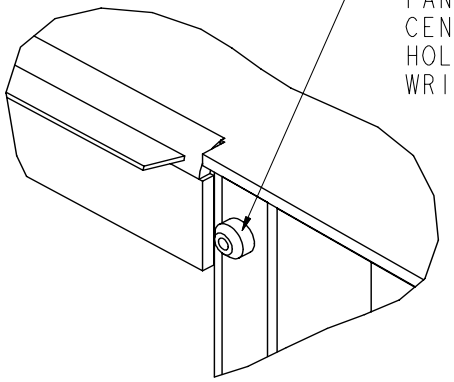

DETAIL BEARING PIN
SCALE 0.250

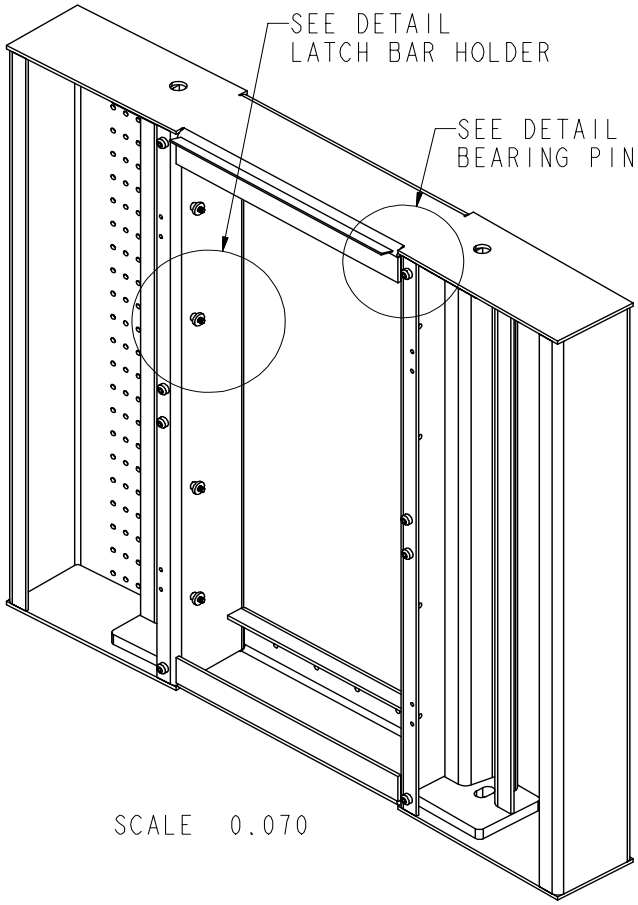

SCALE 0.070

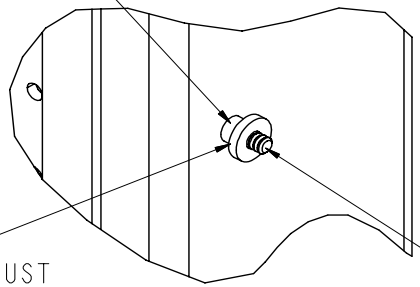

DETAIL LATCH BAR HOLDER
SCALE 0.250

PNEG-1188

No.	ECN	Revision Description	Date	By

THE GSI GROUP
Assumption, IL
Engineering Division:
GRAIN SYSTEMS

2 RING DOOR ASSEMBLY
105' INTERNALLY STIFFENED

TOLERANCES (Unless Noted)
Fractions +/- 1/32"
Decimals +/- .031
Angles +/- 1.00

Stock Size N/A			
Material N/A			
Sheet 1 of 2		INW N/A	Drawing No.
Weight Index N/A	Sq. Ft. N/A	Ship Wt. 890.925	PAGE 5 OF 11
Drawn By TJH	Date 25-Apr-02	Scale NONE	
Checked By TBD	Date 00-00-00	Work to Dimensions Do Not Scale	

REV. 6/30/03

ITM	PART #	QTY	DESCRIPTION
1	NCWT0125	1	NCWT0052 FRAME WITH STIFFENERS
2	NCWT0131L	1	SIDEWALL CONNECTOR PLATE
3	NCWT0131R	1	SIDEWALL CONNECTOR PLATE
4	NCWT0053	1	OUTER DOOR FRAME WELDMENT
5	NCWT0128	6	INNER HINGE HOUSING
6	NCWT0062_ASSEMB	1	TOP INNER DOOR ASSEMBLY
7	NCWT0063_ASSEMB	1	BOTTOM INNER DOOR ASSEMBLY
8	NCWT0161_ASSY	1	OUTER COVER ASSEMBLY W/ DECALS

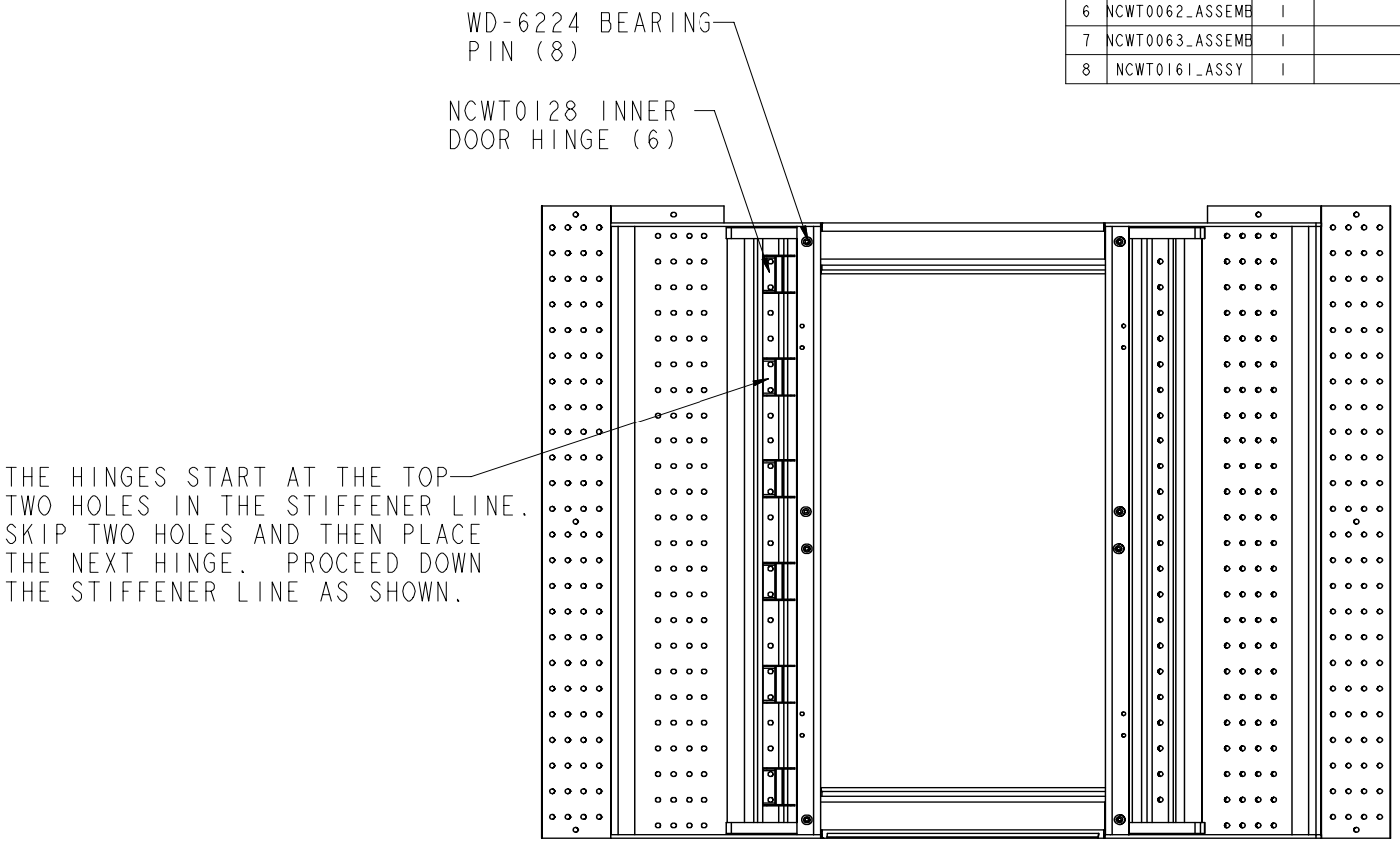

NOTE: INNER DOOR PANELS AND OUTER DOOR COVER NOT SHOWN FOR CLARITY.

AS SEEN FROM INSIDE OF BIN

SCALE 0.063

PNEG-1188

No.	ECN	Revision Description	Date	By

REV. 6/30/03

THE GSI GROUP
Assumption, IL
Engineering Division: GRAIN SYSTEMS

2 RING DOOR ASSEMBLY

105' INTERNALLY STIFFENED

TOLERANCES (Unless Noted)
Fractions +/- 1/32"
Decimals +/- .031
Angles +/- 1.00

Stock Size: N/A
Material: N/A
Sheet 1 of 2
IMW: N/A
Weight Index: N/A
Sq. Ft.: N/A
Ship Wt.: 2150.988
Drawn By: TJH
Date: 25-Apr-02
Scale: NONE
Checked By: TBD
Date: 00-00-00
Work to Dimensions Do Not Scale

Drawing No.

ITM	PART #	QTY	DESCRIPTION
1	NCWT0125	1	NCWT0052 FRAME WITH STIFFENERS
2	NCWT0131L	1	SIDEWALL CONNECTOR PLATE
3	NCWT0131R	1	SIDEWALL CONNECTOR PLATE
4	NCWT0053	1	OUTER DOOR FRAME WELDMENT
5	NCWT0128	6	INNER HINGE HOUSING
6	NCWT0062_ASSEMB	1	TOP INNER DOOR ASSEMBLY
7	NCWT0063_ASSEMB	1	BOTTOM INNER DOOR ASSEMBLY
8	NCWT0161_ASSY	1	OUTER COVER ASSEMBLY W/ DECALS

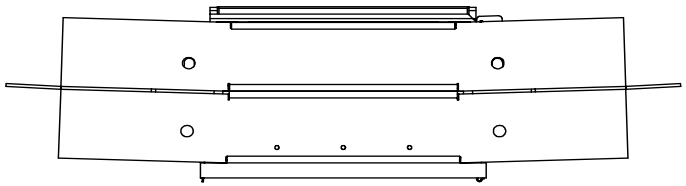

TOP VIEW

CENTER BEARING PIN IN DOOR PANEL HOLE AND TIGHTEN

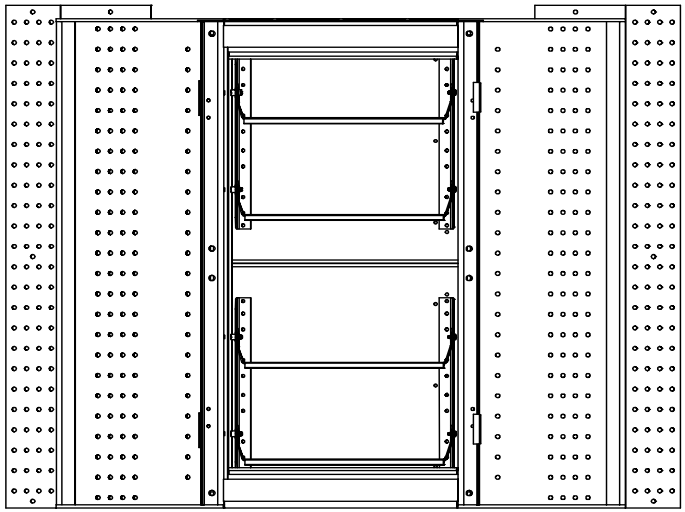

OUTSIDE OF BIN

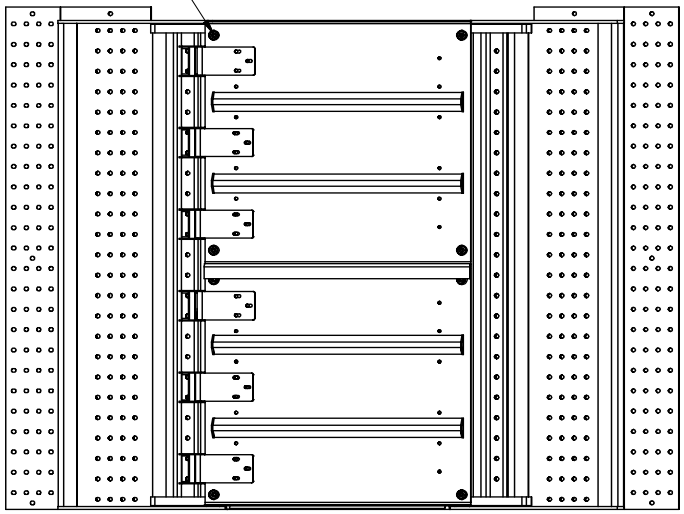

INSIDE OF BIN

PNEG-1188

No.	ECN	Revision Description	Date	By

REV. 6/30/03

THE GSI GROUP
Assumption, IL
Engineering Division:
GRAIN SYSTEMS

2 RING DOOR ASSEMBLY

105' INTERNALLY STIFFENED

TOLERANCES (Unless Noted)
Fractions +/- 1/32"
Decimals +/- .031
Angles +/- 1.00

Stock Size	N/A		
Material	N/A		
Sheet 1 of 2		IMW N/A	Drawing No.
Weight Index N/A	Sq. Ft. N/A	Ship Wt. 2148.810	PAGE 7 OF 11
Drawn By TJH	Date 25-Apr-02	Scale NONE	
Checked By TBD	Date 00-00-00	Work to Dimensions Do Not Scale	

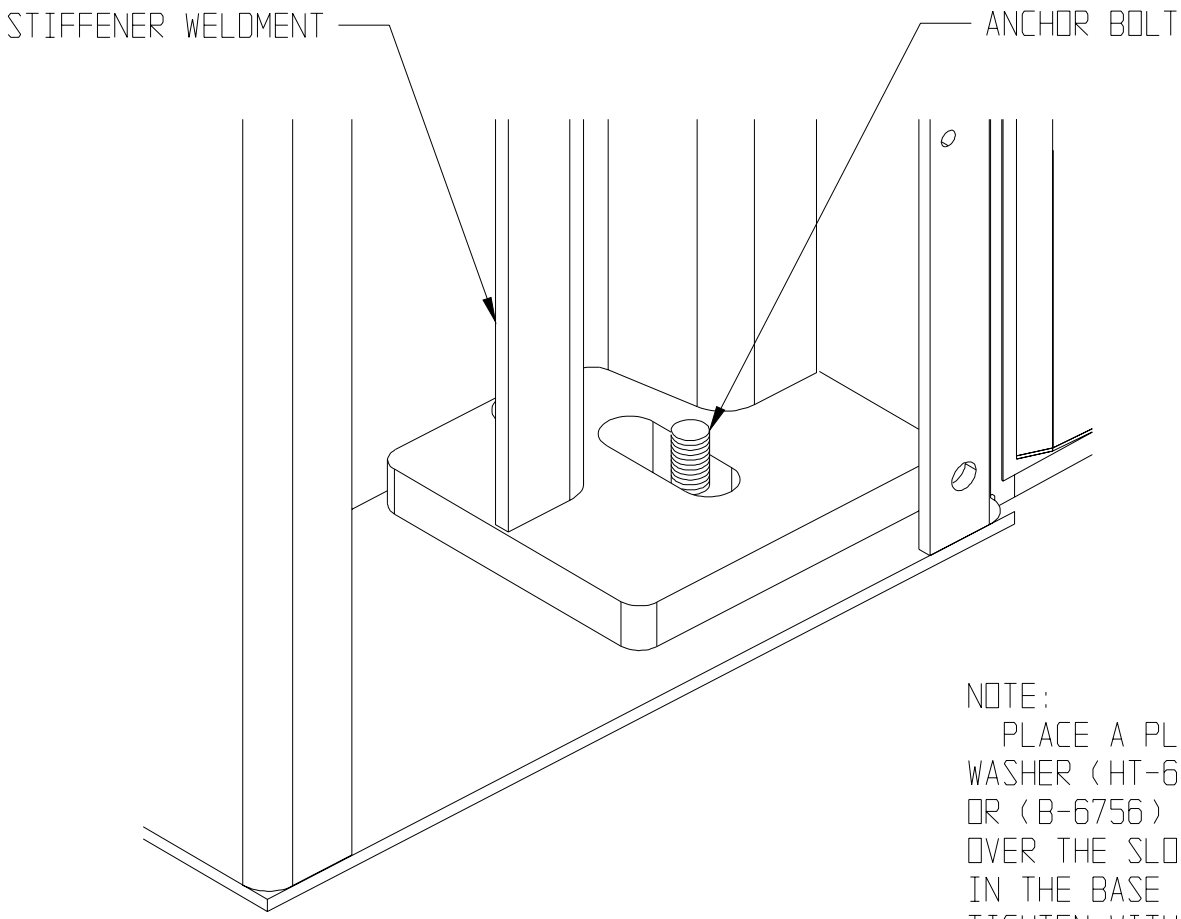

NOTE:
PLACE A PLATE
WASHER (HT-635)
OR (B-6756)
OVER THE SLOT
IN THE BASE PLATE.
TIGHTEN WITH A HEX NUT.

ANCHOR BOLT DETAIL

PNEG-1188

REV. 6/30/03

No.	ECN	Revision Description	Date	By

A DIVISION OF THE GSI GROUP, INC.
Assumption, Il. 62510 217/226-4421

2 RING DOOR ASSEMBLY
105' INTERNALLY STIFFENED

TOLERANCES (Unless Noted)
Fractions +/- 1/32"
Decimals +/- .031"
Angles +/- _ _ _ _ _

Quantity				Material
Sq. Ft.	Blk. Wt.	Ship Wt. N/A		
Drn. By TJH	Date 4/25/02	Scale N.T.S. Work to Dimensions Do Not Scale		Drawing No. PAGE 8 OF 11
Chk'd By	Date			

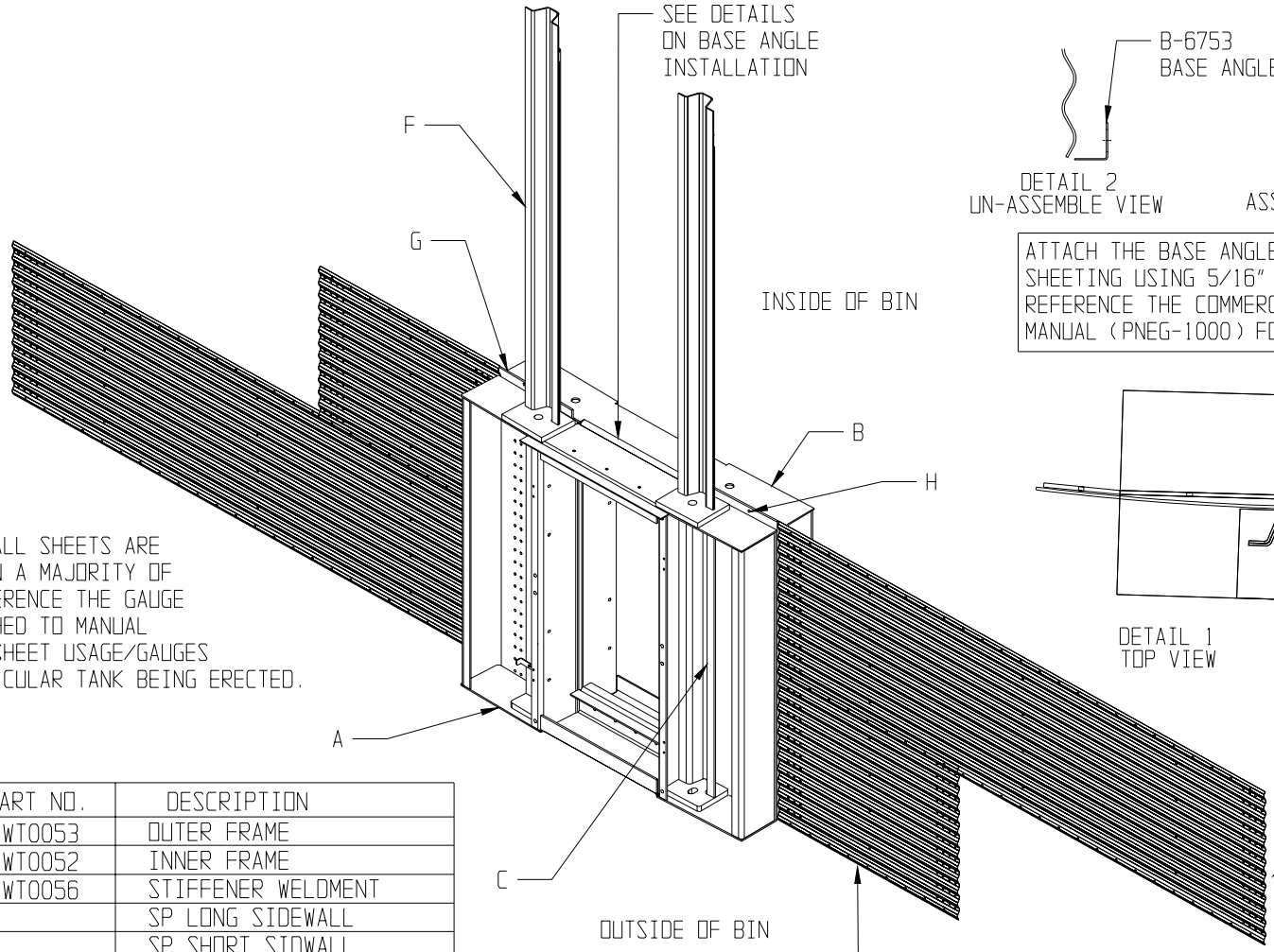

ASSEMBLED VIEW

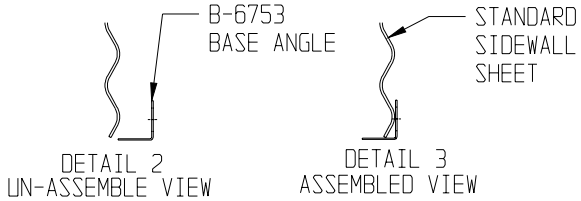

ATTACH THE BASE ANGLE TO THE SIDEWALL SHEETING USING 5/16" x 1 1/4 " BIN BOLTS. REFERENCE THE COMMERCIAL CONSTRUCTION MANUAL (PNEG-1000) FOR FURTHER DETAILS.

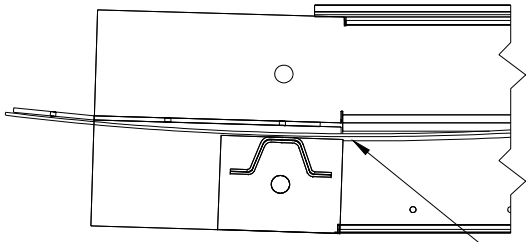

DETAIL 1
TOP VIEW

NOTCH BASE
ANGLE AROUND
BASE STIFFENER

NOTE:
THE SIDEWALL SHEETS ARE LAMINATED IN A MAJORITY OF TANKS. REFERENCE THE GAUGE SHEET ATTACHED TO MANUAL FOR ACTUAL SHEET USAGE/GAUGES ON THE PARTICULAR TANK BEING ERECTED.

KEY	PART NO.	DESCRIPTION
A	NCWT0053	OUTER FRAME
B	NCWT0052	INNER FRAME
C	NCWT0056	STIFFENER WELDMENT
D		SP LONG SIDEWALL
E		SP SHORT SIDWALL
F		STANDARD BASE STIFFENER
G	NCWT0057L	LEFT JAMB/SDW PLATE
H	NCWT0057R	RIGHT JAMB/SDW PLATE

SEE PAGE 10 OF 12
FOR HARDWARE SPECIFICATIONS

PNEG-1188

REV. 6/30/03

No.	ECN	Revision Description	Date	By

A DIVISION OF THE GSI GROUP, INC.
Assumption, Il. 62510 217/226-4421

2 RING DOOR ASSEMBLY
105' INTERNALLY STIFFENED

TOLERANCES (Unless Noted)
Fractions +/- 1/32"
Decimals +/- .031"
Angles +/- - - - - -

Quantity			Material
Sq. Ft.	Blk. Wt.	Ship Wt.	
Drn. By TJH	Date 4/26/02	Scale N.T.S. Work to Dimensions Do Not Scale	Drawing No.
Chk'd By	Date		

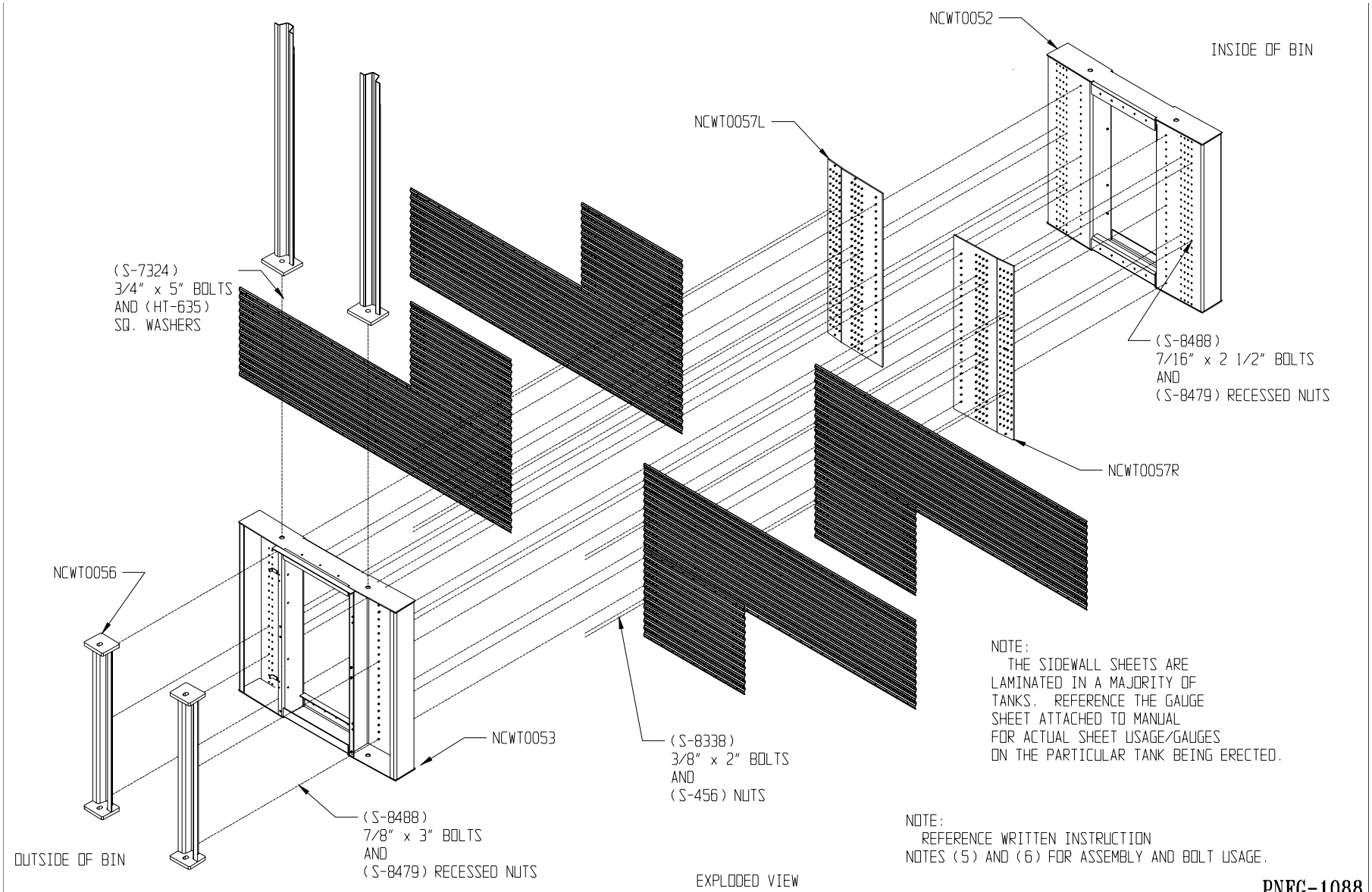

NOTE:
THE SIDEWALL SHEETS ARE LAMINATED IN A MAJORITY OF TANKS. REFERENCE THE GAUGE SHEET ATTACHED TO MANUAL FOR ACTUAL SHEET USAGE/GAUGES ON THE PARTICULAR TANK BEING ERECTED.

NOTE:
REFERENCE WRITTEN INSTRUCTION NOTES (5) AND (6) FOR ASSEMBLY AND BOLT USAGE.

EXPLODED VIEW

PNEG-1088

No.	ECN	Revision Description	Date	By

GSI — A DIVISION OF THE GSI GROUP, INC.
Assumption, Il. 62510 217/226-4421

105 NCWT DOOR
EXTERNALLY STIFFENED

TOLERANCES (Unless Noted)
Fractions +/- 1/32"
Decimals +/- .031"
Angles +/- _ _ _ _ _

Quantity			Material
Sq. Ft.	Blk. Wt.	Ship Wt.	
Drn. By K. GAMMON	Date 7/19/01	Scale N.T.S. Work to Dimensions Do Not Scale	Drawing No. PAGE 10 OF 11
Chk'd By	Date		

REV. 6/30/03

ITM	PART #	QTY	DESCRIPTION
1	NCWT0161	1	OUTER DOOR COVER
2	NCWT0162	3	REINF. CHANNEL
3	NCWT0170	2	OUTER COVER HINGE
4	WD-033	2	DOOR RETAINING BRACKET
5	DC-GBC-2S	1	OUTER DOOR DECAL (ENGLISH)
6	DC-GBC-2A	1	OUTER DOOR DECAL (ENGLISH)

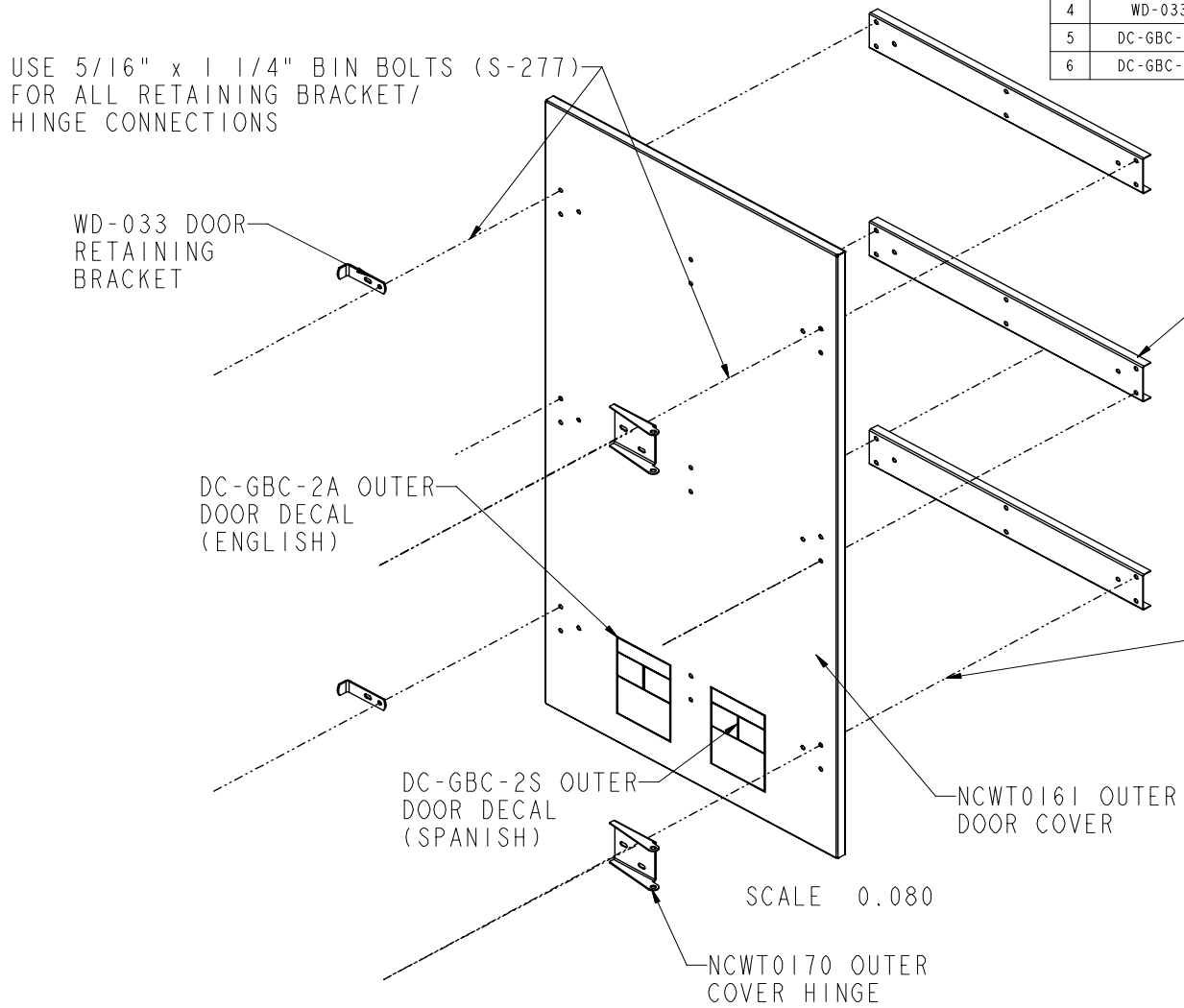

NOTE:
DC-GBC-1A & DC-GBC-1S DECALS SHOULD BE LOCATED ON INSIDE OF OUTER DOOR COVER

SCALE 0.080

PNEG-1188

No.	ECN	Revision Description	Date	By
2	4729	REDESIGN OF OUTER DOOR COVER	3/26/03	KDK

THE GSI GROUP
Assumption, IL
Engineering Division: GRAIN SYSTEMS

2 RING DOOR ASSEMBLY
105' INTERNALLY STIFFENED

TOLERANCES (Unless Noted)
Fractions +/- 1/32"
Decimals +/- .031
Angles +/- 1.00

Stock Size	N/A		
Material	N/A		
Sheet 1 of 1		IMW N/A	Drawing No.
Weight Index N/A	Sq. Ft. N/A	Ship Wt. 40.700	PAGE 11 OF 11
Drawn By TJH	Date 25-Mar-03	Scale NONE	
Checked By TBD	Date 00-00-00	Work to Dimensions Do Not Scale	

REV. 6/30/03

Warranty

THE GSI GROUP, INC. ("GSI") WARRANTS ALL PRODUCTS MANUFACTURED BY GSI TO BE FREE OF DEFECTS IN MATERIAL AND WORKMANSHIP UNDER NORMAL USAGE AND CONDITIONS FOR A PERIOD OF TWELVE MONTHS AFTER RETAIL SALE TO THE ORIGINAL END USER OF SUCH PRODUCTS. GSI'S ONLY OBLIGATION IS, AND PURCHASER'S SOLE REMEDY SHALL BE FOR GSI, TO REPAIR OR REPLACE, AT GSI'S OPTION AND EXPENSE, PRODUCTS THAT, IN GSI'S SOLE JUDGMENT, CONTAIN A MATERIAL DEFECT DUE TO MATERIALS OR WORKMANSHIP. ALL DELIVERY AND SHIPMENT CHARGES TO AND FROM GSI'S FACTORY WILL BE PURCHASER'S RESPONSIBILITY. EXPENSES INCURRED BY OR ON BEHALF OF THE PURCHASER WITHOUT PRIOR WRITTEN AUTHORIZATION FROM AN AUTHORIZED EMPLOYEE OF GSI SHALL BE THE SOLE RESPONSIBILITY OF THE PURCHASER.

EXCEPT FOR THE ABOVE STATED EXPRESS LIMITED WARRANTIES, GSI MAKES NO WARRANTY OF ANY KIND, EXPRESSED OR IMPLIED, INCLUDING, WITHOUT LIMITATION, WARRANTIES OF MERCHANTABILITY OR FITNESS FOR A PARTICULAR PURPOSE OR USE IN CONNECTION WITH (i) PRODUCT MANUFACTURED OR SOLD BY GSI OR (ii) ANY ADVICE, INSTRUCTION, RECOMMENDATION OR SUGGESTION PROVIDED BY AN AGENT, REPRESENTATIVE OR EMPLOYEE OF GSI REGARDING OR RELATED TO THE CONFIGURATION, INSTALLATION, LAYOUT, SUITABILITY FOR A PARTICULAR PURPOSE, OR DESIGN OF SUCH PRODUCT OR PRODUCTS.

IN NO EVENT SHALL GSI BE LIABLE FOR ANY DIRECT, INDIRECT, INCIDENTAL OR CONSEQUENTIAL DAMAGES, INCLUDING, WITHOUT LIMITATION, LOSS OF ANTICIPATED PROFITS OR BENEFITS. PURCHASER'S SOLE AND EXCLUSIVE REMEDY SHALL BE LIMITED TO THAT STATED ABOVE, WHICH SHALL NOT EXCEED THE AMOUNT PAID FOR THE PRODUCT PURCHASED. THIS WARRANTY IS NOT TRANSFERABLE AND APPLIES ONLY TO THE ORIGINAL PURCHASER. GSI SHALL HAVE NO OBLIGATION OR RESPONSIBILITY FOR ANY REPRESENTATIVE OR WARRANTIES MADE BY OR ON BEHALF OF ANY DEALER, AGENT OR DISTRIBUTOR OF GSI.

GSI ASSUMES NO RESPONSIBILITY FOR FIELD MODIFICATIONS OR ERECTION DEFECTS WHICH CREATE STRUCTURAL OR STORAGE QUALITY PROBLEMS. MODIFICATIONS TO THE PRODUCT NOT SPECIFICALLY COVERED BY THE CONTENTS OF THIS MANUAL WILL NULLIFY ANY PRODUCT WARRANTY THAT MIGHT HAVE BEEN OTHERWISE AVAILABLE.

THE FOREGOING WARRANTY SHALL NOT COVER PRODUCTS OR PARTS WHICH HAVE BEEN DAMAGED BY NEGLIGENT USE, MISUSE, ALTERATION OR ACCIDENT. THIS WARRANTY COVERS ONLY PRODUCTS MANUFACTURED BY GSI. THIS WARRANTY IS EXCLUSIVE AND IN LIEU OF ALL OTHER WARRANTIES EXPRESS OR IMPLIED. GSI RESERVES THE RIGHT TO MAKE DESIGN OR SPECIFICATION CHANGES AT ANY TIME.

PRIOR TO INSTALLATION, PURCHASER HAS THE REPONSIBILITY TO RESEARCH AND COMPLY WITH ALL FEDERAL, STATE AND LOCAL CODES WHICH MAY APPLY TO THE LOCATION AND INSTALLATION

THE GSI GROUP

G. S. I. Division of
The GSI Group, Inc.
1004 E. Illinois St.
P.O. Box 20
Assumption, Il. 62510-0020

Phone: 217.226.4421
Fax: 217.226.4420
e-mail: gsisales@grainsystems.com
internet: http://www.grainsystems.com