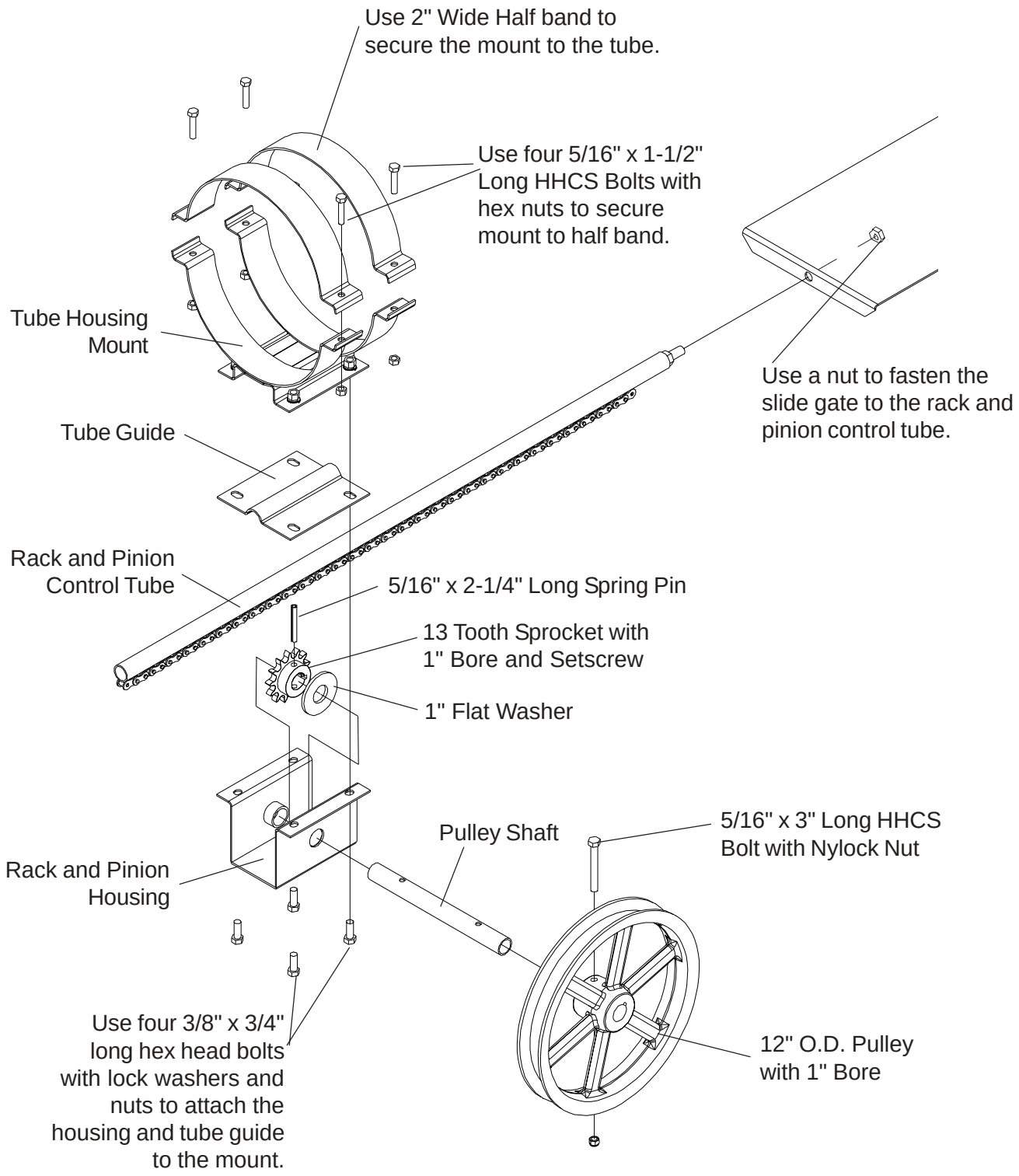RACK AND PINION CONTROL KIT ASSEMBLY INSTRUCTIONS